FRONT AXLE

CONTENTS

GENERAL INFORMATION 2

SERVICE SPECIFICATIONS 4

LUBRICANTS 4

SEALANTS 5

SPECIAL TOOLS 5

ON-VEHICLE SERVICE 10

- Wheel Bearing Backlash Check 10
- Front Axle Total Backlash Check 10
- Front Axle Gear Oil Level Check 11
- Differential Carrier Oil Seal Replacement 11
- Solenoid Valve Operation Check 12

FRONT HUB AND KNUCKLE ASSEMBLY . 13

DRIVE SHAFT 16

INNER SHAFT, HOUSING TUBE 24

FREEWHEEL CLUTCH ASSEMBLY, DIFFERENTIAL CARRIER 28

FREEWHEEL CLUTCH ASSEMBLY 31

DIFFERENTIAL CARRIER 34

SOLENOID VALVE, VACUUM PIPE, VACUUM TANK 49

FRONT DIFFERENTIAL MOUNT 51

GENERAL INFORMATION

The front axle consists of the front hubs, knuckles, drive shaft, wheel bearings, ball joints, front differential, and freewheel clutch.
The features are:

- The structural method of press fitting unit bearing into the front hub is applied.
- The wheel bearing uses a taper roller unit bearing. For vehicles with ABS, a rotor for detecting the wheel speed is press-fitted to the U.J. outer wheel.
- Drive shafts incorporate U.J.-B.J.-type constant velocity ball joint has high power transmission efficiency and reduces vibration and noise.

NOTE
U.J. is an abbreviation of Under cut Joint.

- A vacuum-type freewheel clutch has been adopted in the freewheel mechanism. Its solenoid valve and actuator switch powertrain between 2WD and 4WD.
- The differential support method is a four-point elastic support method which reduces vibration and noise.

Item			Specification
Wheel bearings	Wheel bearing type		Taper roller type unit bearing
	Bearing (outside diameter × inside diameter) mm		88 × 50
Drive shaft	Joint type	Outside	U.J.
		Inside	D.O.J.
	Shaft length*1 × Shaft diameter mm	Right	353 × 28*2, 361.5 × 26*3
		Left	323 × 28*2, 330 × 26*3
Inner shaft	Shaft length × Shaft diameter mm		389.2 × 31.5
	Bearing (outside diameter × inside diameter) mm		62 × 35

NOTE
*1: The shaft length indicates the length between the center points of each joint.
*2: 4M41-M/T
*3: 4D56, 4M41-A/T, 6G74 GDI

FRONT DIFFERENTIAL

Item		Specification
Reduction gear type		Hypoid gear
Reduction ratio		4.900*1, 3.917*2, 4.100*3, 4.300*4
Differential gear type		Straight bevel gear
Number of teeth	Drive gear	49*1, 47*2, 41*3, 43*4
	Drive pinion	10*1,*3,*4, 12*2
	Side gear	14
	Pinion gear	10

NOTE
*1: 4D56
*2: 4M41-A/T
*3: 4M41-M/T
*4: 6G74 GDI

Bearing (outside diameter × inside diameter) mm	Side	80.0 × 45.2
	Front	68.3 × 30.2
	Rear	72.2 × 36.5

STRUCTURAL DIAGRAM

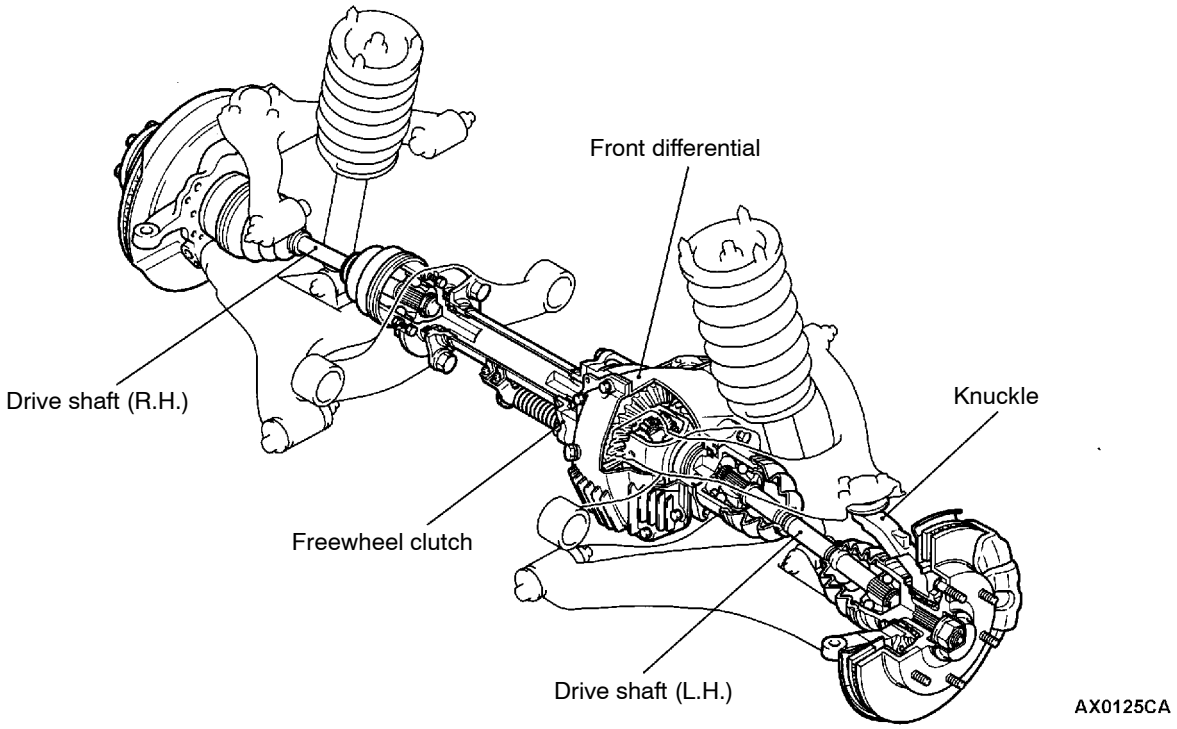

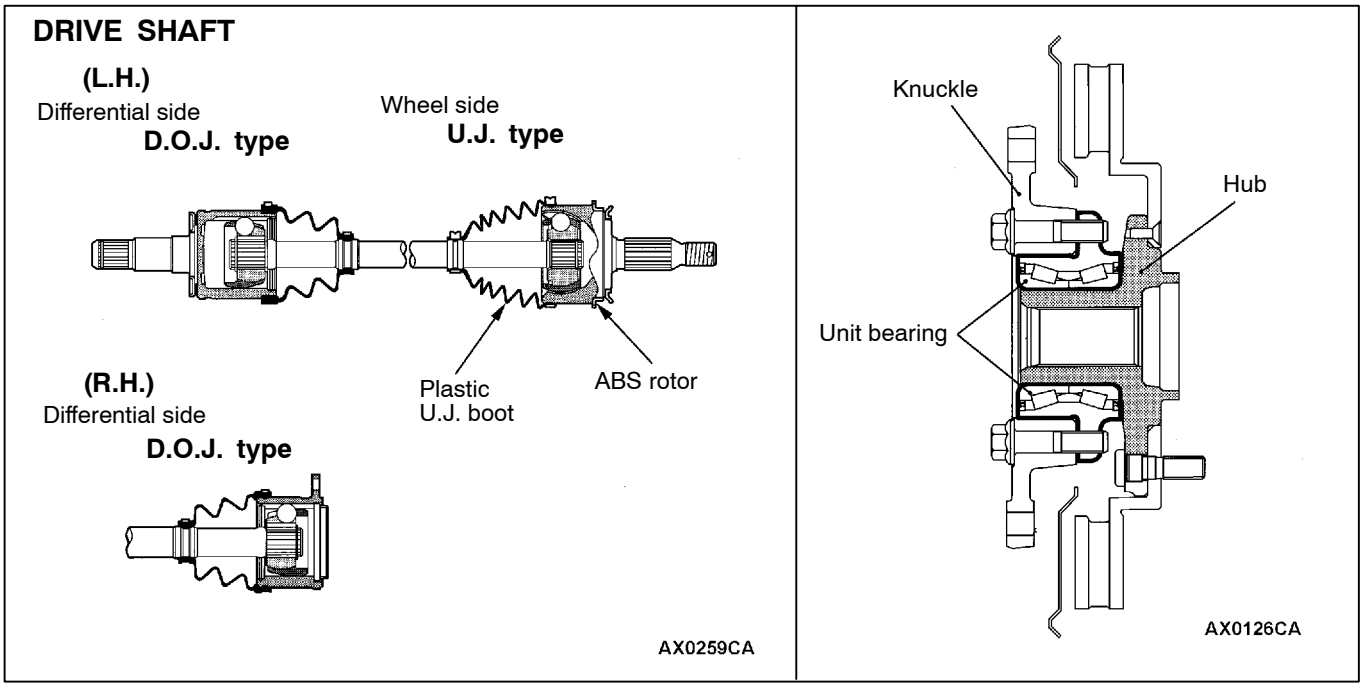

SERVICE SPECIFICATIONS

Item		Standard value	Limit
Wheel bearing axis backlash mm		-	0
Front axle total backlash mm		-	11
Solenoid valve resistance Ω		36 - 46	-
Hub rotation starting torque N·m		-	1.75
Setting of D.O.J. boot length mm		80 ± 5	-
Opening dimension of the special tool (MB991561) mm	When the B.J. boot band (small) is crimped.	2.9	-
	When the B.J. boot band (big) is crimped.	3.2	-
Crimped width of the B.J. boot band mm		2.4 - 2.8	-
Crimped height of B. J. boot band (big) mm		-	9.5
Final drive gear backlash mm		0.11 - 0.16	-
Drive gear runout mm		-	0.05
Differential gear backlash mm		0 - 0.076	0.2
Drive pinion turning torque N·m	Without oil seal	0.83 - 1.19	-
	With oil seal	Companion flange (oil seal contact surface) with anti-rust oil 0.93 - 1.128	-
		Companion flange (oil seal contact surface) with gear oil 0.97 - 1.32	-

LUBRICANTS

Items	Specified lubricants	Quantity
Front differential gear oil	Hypoid gear oil API classification GL-5 or higher, SAE viscosity No. 90, 80W	1.2 L
D.O.J. boot grease	Repair kit grease	4M41-M/T:135 ± 10 g 4M41-A/T, 6G7: 100 ± 10 g
U.J.boot grease	Repair kit grease	4M41-M/T:180 ± 10 g 4M41-A/T, 6G7: 135 ± 10 g

SEALANTS

Items	Specified sealants	Remarks
Contact surface of differential cover and differential carrier	3M ATD Part No. 8661 or equivalent	Semi-drying sealant
Vent plug		
Freewheel clutch assembly		
Drive gear threaded hole	3M Stud Locking 4170 or equivalent	Anaerobic sealant

SPECIAL TOOLS

Tool	Number	Name	Use
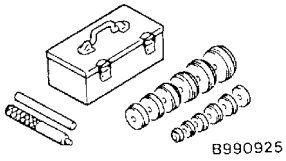	MB990925	Bearing and oil seal installer set	• Press-fitting of housing tube dust seal • Press-fitting of oil seal • Removal and installation of drive pinion front & rear bearing outer race • Checking of drive gear tooth contact
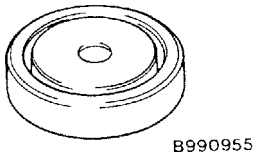	MB990955	Oil seal installer	• Press-fitting of housing tube dust seal (Used together with MB990938)
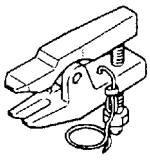	MB991113 or MB990635	Steering linkage puller	• Disconnection of ball joint
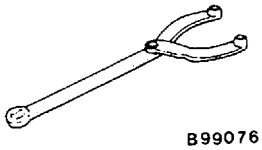	MB990767	Front hub & flange yoke holder	Hub fixiation
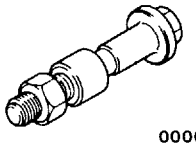	MB990998	Front hub remover & installer	Inspection of hub rotation starting torque
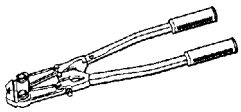	MB991561	Boot band clipping tool	Resin boot band installation
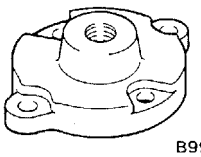	MB990906	Drive shaft attachment	Removal and installation of inner shaft (Used together with MB990211)

Tool	Number	Name	Use
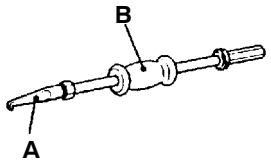	MB990590 A: MB990212 B: MB990211	Rear axle shaft oil seal remover A: Adapter B: Sliding hammer	● Removal of differential carrier oil seal ● Removal and installation of inner shaft (Used together with MB990906)
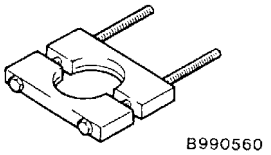	MB990560	Bearing remover	● Removal and press-fitting of inner shaft bearing ● Removal of freewheel clutch bearing
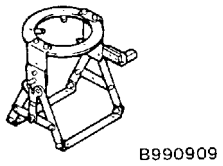	MB990909	Working base	Support of front differential carrier assembly
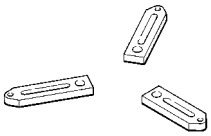	MB991116	Adapter	Support of front differential carrier assembly
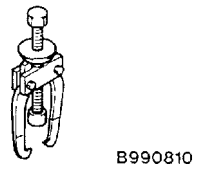	MB990810	Side bearing puller	● Removal of side bearing inner race ● Removal of companion flange
	MB990811	Differential side bearing cap	
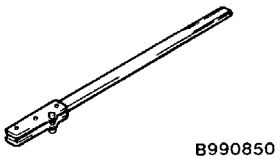	MB990850	End yoke holder	Removal and installation of companion flange
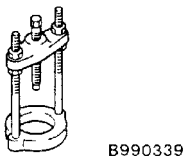	MB990339	Bearing puller	Removal of drive pinion front bearing inner race
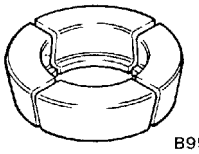	MB990648	Bearing remover	

Tool	Number	Name	Use
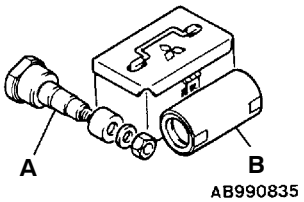	MB991171 A: MB990819 B: MB991170	Pinion height gauge set A: Drive pinion gauge assembly B: Cylinder gauge	● Inspection of drive pinion rotation starting torque ● Measurement of drive pinion height
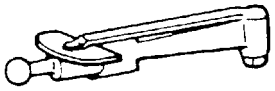	MB990685	Torque wrench	● Inspection of hub rotation starting torque ● Measurement of drive pinion rotation starting torque
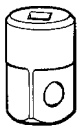	MB990326	Preload socket	
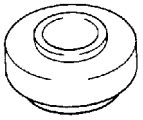	MB990802	Bearing installer	● Press-fitting of drive pinion front bearing inner race ● Press-fitting of side bearing inner race
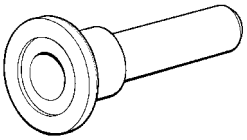	MB990031 or MB990699	Drive pinion oil seal installer	Press-fitting of drive pinion oil seal
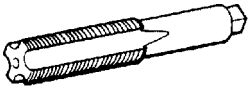	MB990813	Tap	Removal of adhesive
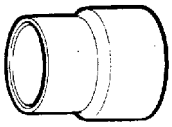	MB990799	Ball joint remover and installer	Installation of freewheel clutch bearing
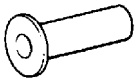	MB991168	Differential oil seal installer	Installation of freewheel clutch oil seal

Tool	Number	Name	Use
	MB990890 or MB990891	Rear suspension bushing base	Installation of freewheel clutch bearing
	MD999547	Oil seal installer	Removal of front differential mount insulator <Front, rear L.H.>
	MD999570	Crankshaft front oil seal installer	Removal of front differential mount insulator <Rear R.H.>
B990947	MB990947	Lower arm bush arbor	Press fitting of front differential mount insulator <Front, rear L.H.>
B990847	MB990847	Rear suspension bush remover & installer base	
B990884	MB990981	Mount bush remover & installer ring	
B991318	MB991318	Lower arm bush arbor	Press fitting of front differential mount insulator <Rear R.H.>
	MB991183	Bush arbor	
	MB990843	Draglink bush remover & installer	

MB990925

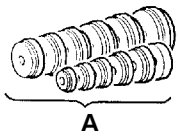

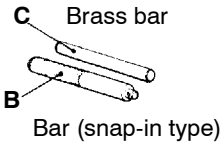

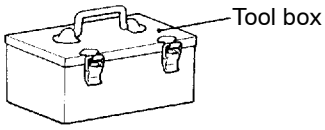

A11W0113

	Contents of tool (MB990925)	O.D. mm		Contents of tool (MB990925)	O.D. mm
A	MB990926	39	A	MB990933	63.5
	MB990927	45		MB990934	67.5
	MB990928	49.5		MB990935	71.5
	MB990929	51		MB990936	75.5
	MB990930	54		MB990937	79
A	MB990931	57	B	MB990938	-
A	MB990932	61	C	MB990939	-

ON-VEHICLE SERVICE

WHEEL BEARING BACKLASH CHECK

1. Remove the caliper assembly and hold it with wires to prevent it from falling.
2. Remove the brake disk from hub.

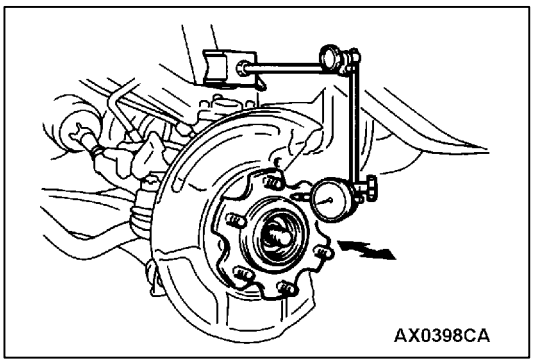

3. Set the dial gauge as shown in the diagram and move the hub in the axis to measure backlash.

   Limit: 0 mm
4. If the backlash exceeds the limit value, disassemble hub knuckle to check each component. If front hub assembly bearing is faulty, replace the front hub assembly.

FRONT AXLE TOTAL BACKLASH CHECK

When the iginition switch is in LOCK(OFF) position, front wheel comes to stop after turning the propeller shaft by hand due to the force applied to front wheel actuator. Inspect the vehicle in the following procedure:

1. Turn the ignition switch to LOCK(OFF) position, and then put the transfer shift lever to the 2H position.

   Caution
   Do not jack up the vehicle.

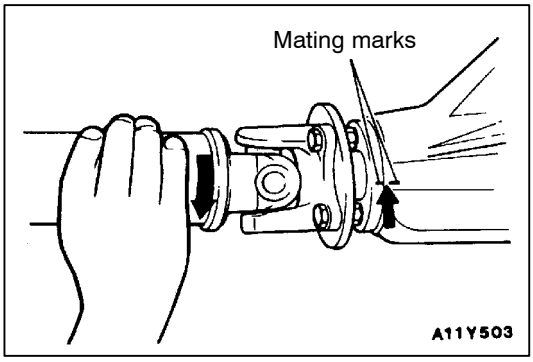

2. Turn the propeller shaft until a click is heard.
3. Turn the companion flange clockwise until all play is removed. Make mating marks on the dust cover of the companion flange with that on the differential carrier.

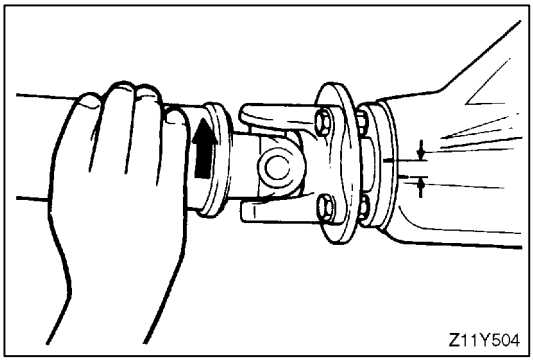

4. Turn the companion flange anti-clockwise until all play is removed and measure the amount of distance through which the mating marks moved.

   Limit: 11 mm

5. If the amount of movement exceeds the limit value, check the following.
   (1) Final drive gear backlash
   (2) Differential gear backlash
   (3) Play in the serrations and splines of the side gears, drive shaft, inner shaft and drive flange

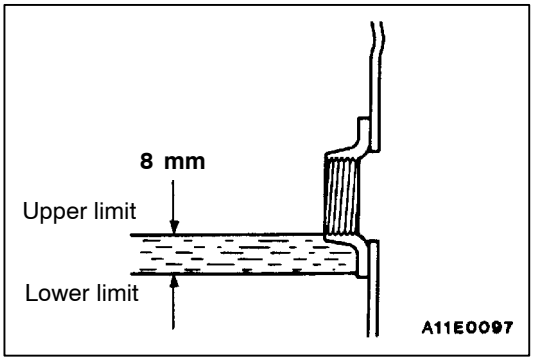

FRONT AXLE GEAR OIL LEVEL CHECK

Remove the filler plug, and check the gear oil level. Check that gear oil level is not 8 mm below the bottom of filler plug hole.

Specified gear oil:
Hypoid gear oil API classification GL-5 or higher, SAE viscosity No. 90, 80W [Quantity: 1.2 L**]**

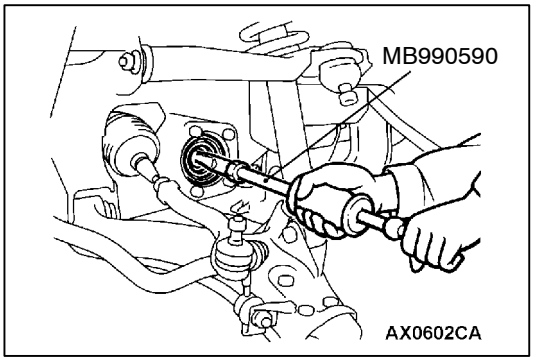

DIFFERENTIAL CARRIER OIL SEAL REPLACEMENT

1. Remove the drive shaft <L.H.>. (Refer to P.26-16.)
2. Remove the oil seal with special tools.

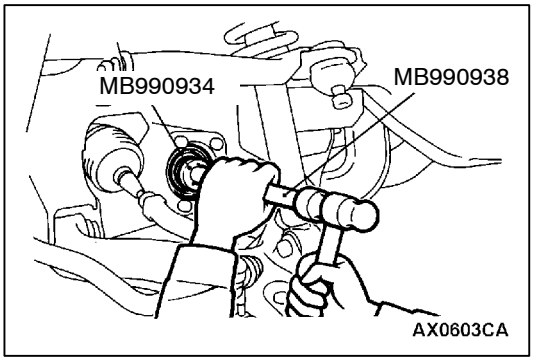

3. Install new oil seal with the special tools.

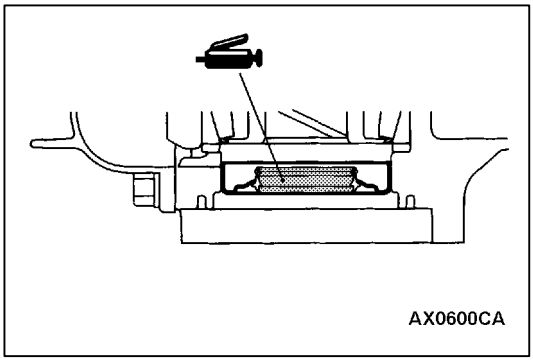

4. Apply multi-purpose grease to lip of oil seal to install drive shaft <L.H.>. (Refer to P.26-16)

   Caution
   1. Be careful not to damage the lip of oil seal
   2. Replace the circlip attached to the spline of DOJ side of drive shaft <L.H.> with a new one.

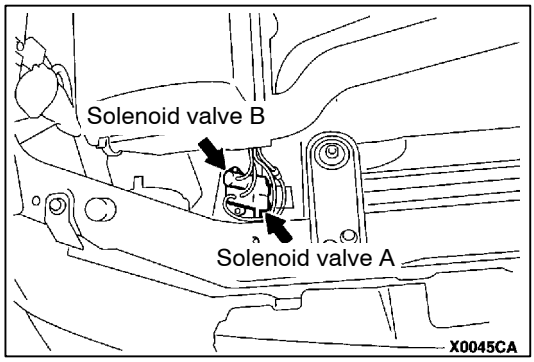

SOLENOID VALVE OPERATION CHECK

1. Remove the vacuum hoses (blue stripe, yellow stripe) from the solenoid valves.
2. Disconnect the harness connectors.

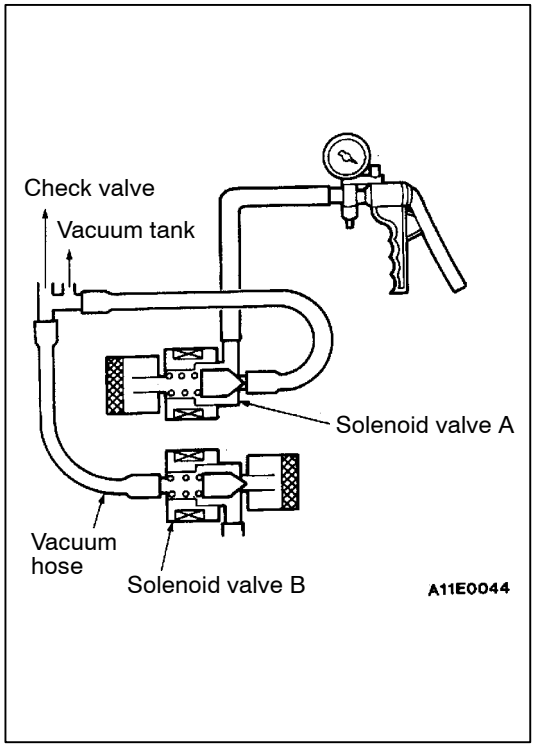

3. Connect a hand vacuum pump to solenoid valve A and carry out the following inspections.
   (1) Even if the hand pump is operated with no other operation, no negative pressure develops.
   (2) Negative pressure does not develop when battery voltage is applied to solenoid valve A. Meanwhile, negative pressure is maintained when the vacuum hose of solenoid valve B is blocked by bending.
   (3) When battery voltage is applied to solenoid valves A and B, negative pressure is maintained.

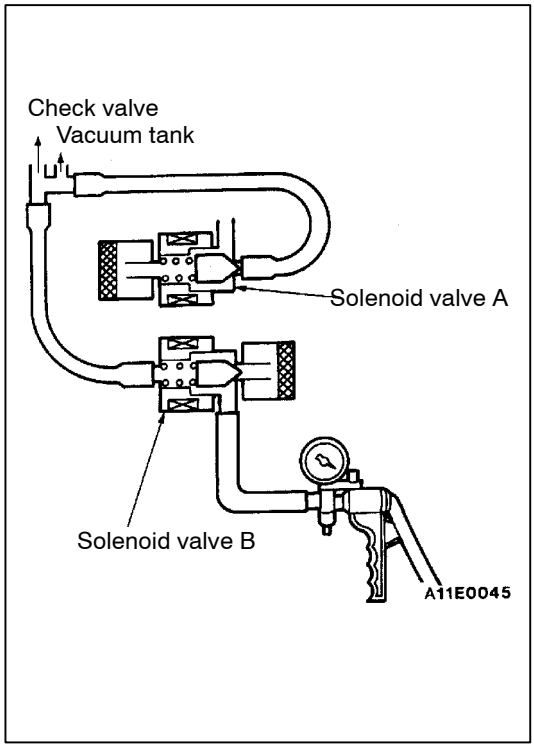

4. Connect the hand vacuum pump to solenoid valve B. Apply negative pressure and carry out the following inspections.
   (1) With no other operation, negative pressure is maintained.
   (2) When battery voltage is applied to solenoid valve B, negative pressure disappears.
   (3) When battery voltage is applied to solenoid valve A, negative pressure disappears.
5. Measure the resistance of the solenoid valves.

   Standard value: 36 - 46 Ω

HUB AND KNUCKLE ASSEMBLY

REMOVAL AND INSTALLATION

Post-installation Operation
Press dust cover with a finger to check for crack or damage in ball joint dust cover.

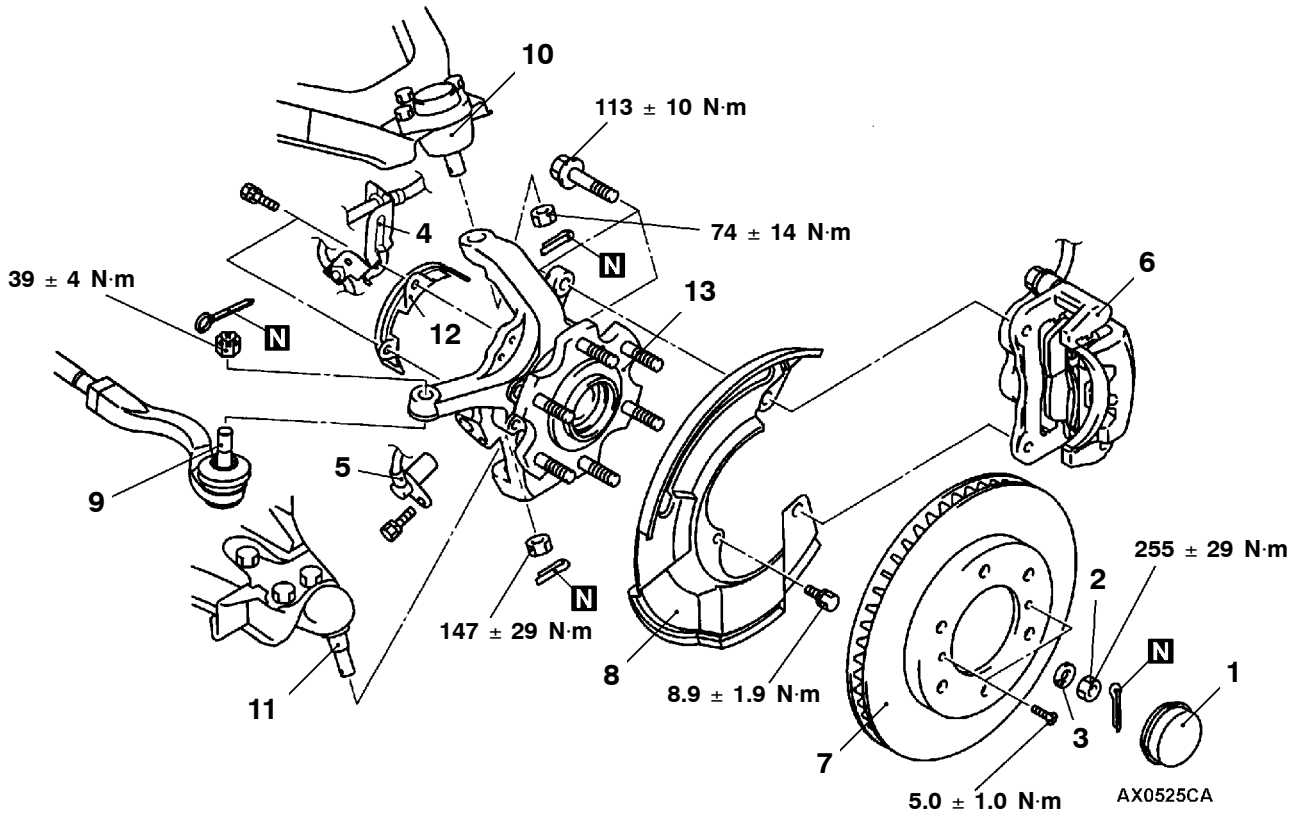

Removal steps

1. Hub cap
◀A▶ ▶A◀ 2. Castle nut
▶A◀ 3. Washer
4. Brake hose & vehicle speed sensor clamp bracket
5. Wheel speed sensor <vehicles with ABS>
6. Disc brake assembly
7. Brake disc
8. Dust cover
◀B▶ 9. Tie rod end, hub and knuckle assembly connection
◀B▶ 10. Upper arm, hub and knuckle assembly connection
◀B▶ 11. Lower arm, hub and knuckle assembly connection
12. Rotor protector <vehicles with ABS>
13. Hub and knuckle assembly

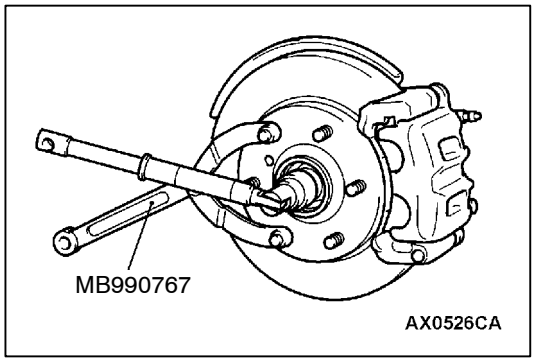

REMOVAL SERVICE POINTS

◀A▶ CASTLE NUT REMOVAL

Caution
Do not apply pressure to wheel bearing by the vehicle weight to avoid possible damage when castle nut is loosened.

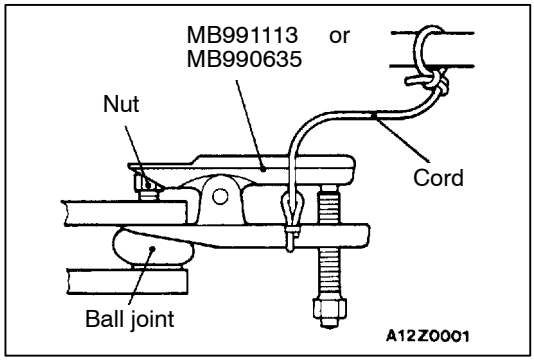

◀B▶ TIE ROD END, HUB AND KNUCKLE ASSEMBLY /UPPER ARM, HUB AND KNUCKLE ASSEMBLY /LOWER ARM, HUB AND KNUCKLE ASSEMBLY DISCONNECTION

Caution
1. **Do not remove nut from ball joint but loosen it and use special tools instead to avoid possible damage to ball joint threads.**
2. **Hang special tools with ropes to prevent them from falling.**

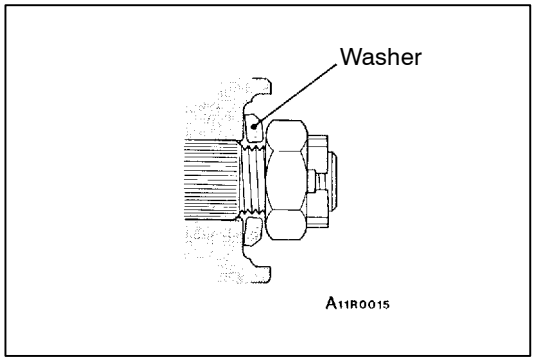

INSTALLATION SERVICE POINT

▶A◀ WASHER/CATSLE NUT INSTALLTION

1. Direct the flat side of a washer to a castle nut to install.

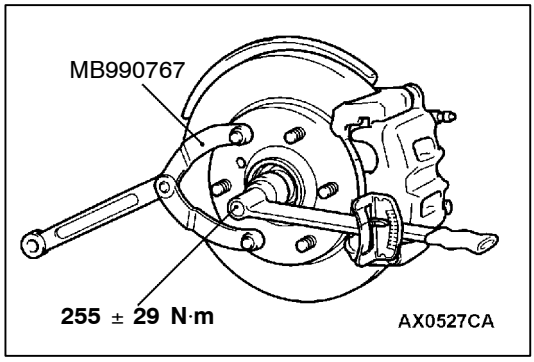

2. Tighten castle nut fully with special tools.

   Caution
   Do not apply pressure to wheel bearing by the vehicle weight to avoid possible damage to wheel bearing before tightening castle nut fully.
3. If the pin hole does not align with another, tighten the pin to 284 N·m and find the nearest hole then bend the sprit pin to fit in.

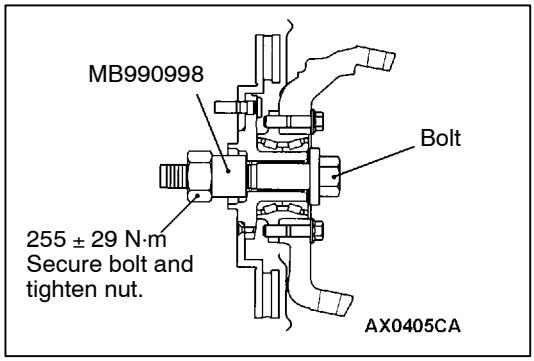

INSPECTION

INSPECTION OF HUB ROTATION STARTING TORQUE

1. Tighten special tools in hub and knuckle assembly to the specified torque.

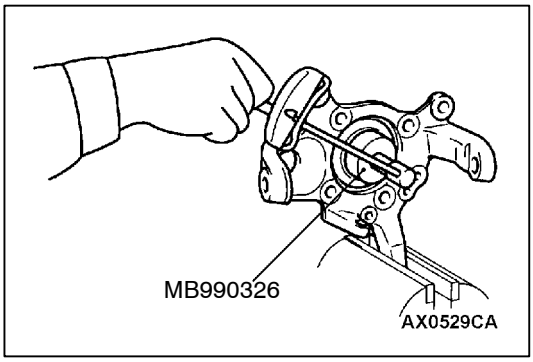

2. Measure the hub rotation starting torque with special tools.

   Limit: 1.75 N·m or less

3. Hub rotation starting torque must be under the limit value and there should be no roughness when rotating the hub.

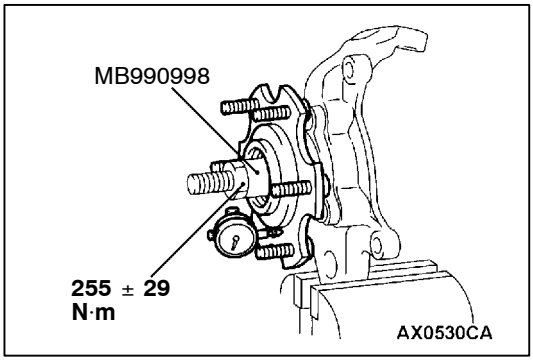

WHEEL BEARING BACKLASH CHECK

1. Secure knuckle in a vice to measure backlash in wheel bearing.

   Limit: 0 mm

2. If the limit value of backlash in hub axis cannot be obtained when tightened to the specified torque (255 ± 29 N·m), check mounting bolt for hub and knuckle assembly. If no defects are found, replace hub assembly.

DISASSEMBLY AND REASSEMBLY

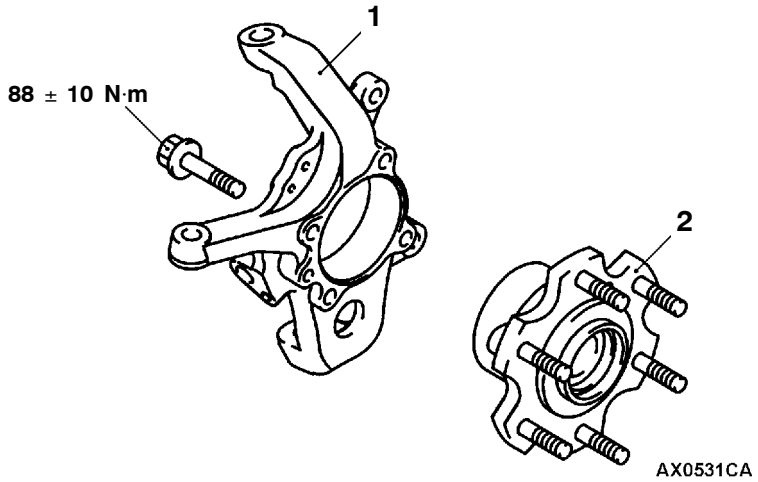

Disassembly steps

1. Knuckle
2. Front hub assembly

DRIVE SHAFT

REMOVAL AND INSTALLATION

Pre-removal and Post-installation Operations
- Removal and Installation of Under Cover and Skid Plate (Refer to GROUP 42.)
- Connection and Disconnection of Shock Absorber and Stabilizer Link in the Lower Arm Side (Refer to GROUP 33 - Lower Arm.)
- Removal and Installation of Front Brake Assembly (Refer to GROUP 35A.)
- Connection and Disconnection of Knuckle and Tie Rod End (Refer to GROUP 37 - Steering Gear Linkage.)

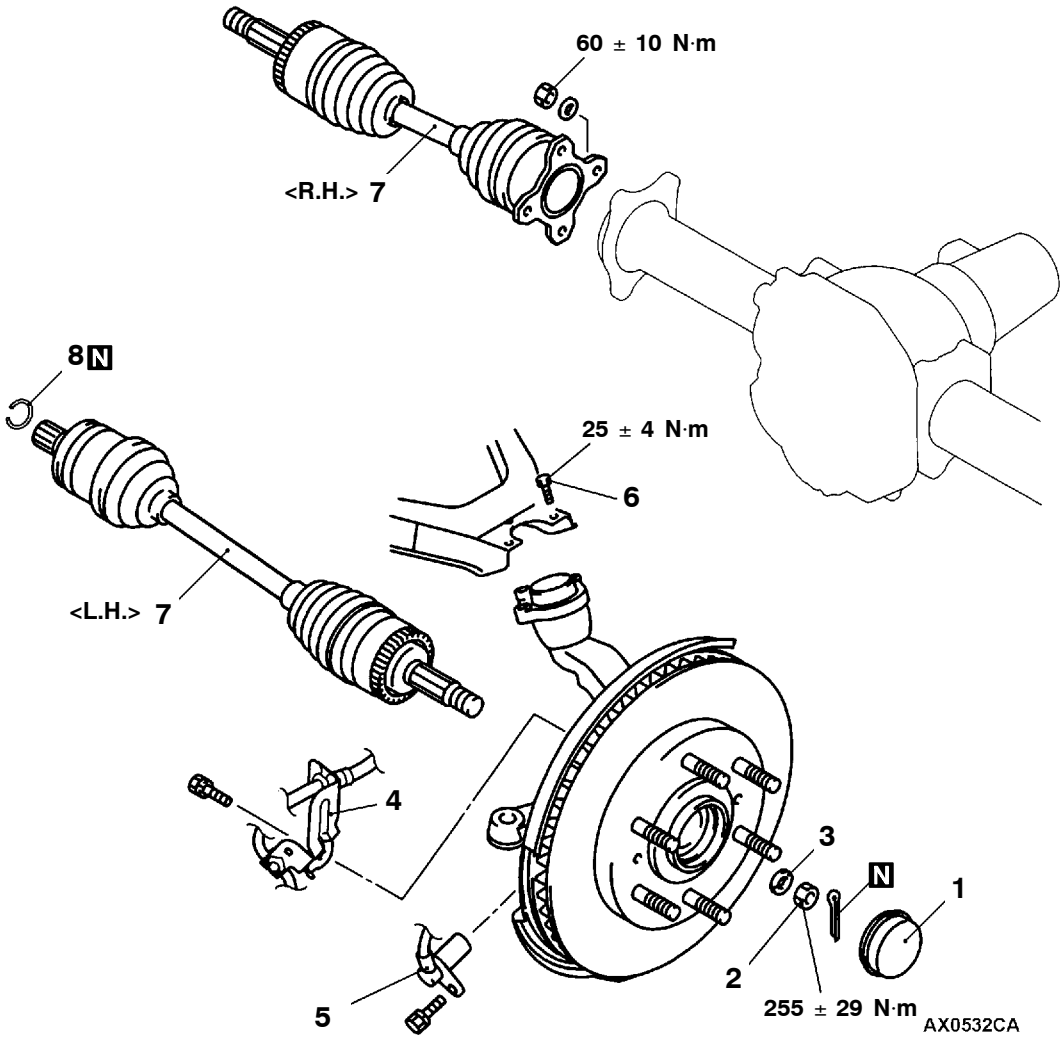

Removal steps

1. Hub cap
◀A▶ ▶B◀ 2. Castle nut
▶B◀ 3. Washer
4. Brake hose and vehicle speed sensor clamp bracket
5. Wheel speed sensor <vehicles with ABS>
6. Upper arm and upper arm ball joint connection
◀B▶ ▶A◀ 7. Drive shaft
8. Circlip <L.H.>

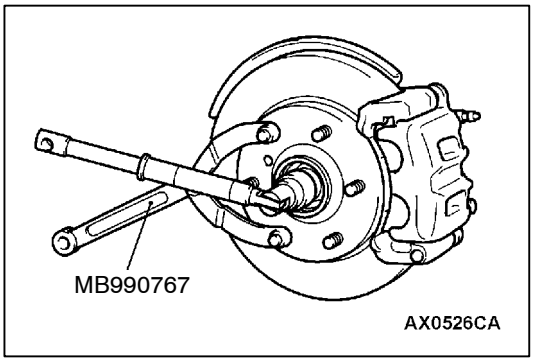

REMOVAL SERVICE POINTS

◀A▶ CASTLE NUT REMOVAL

Caution
Do not apply pressure to wheel bearing by the vehicle weight to avoid possible damage when a castle nut is loosened.

◀B▶ DRIVE SHAFT REMOVAL

Caution
When pulling the drive shaft out from the differential carrier, be careful that the spline part of the drive shaft does not damage the oil seal.

INSTALLATION SERVICE POINTS

▶A◀ DRIVE SHAFT INSTALLATION

Caution
Do not damage the oil seal of the differential carrier by the drive shaft splines.

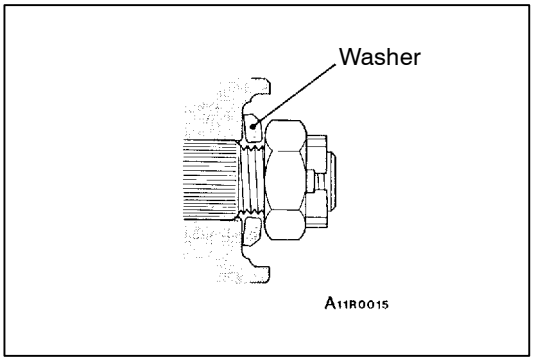

▶B◀ WASHER/CASTLE NUT INSTALLATION

1. Fit washer in castle nut with its smaller side facing the castle nut.

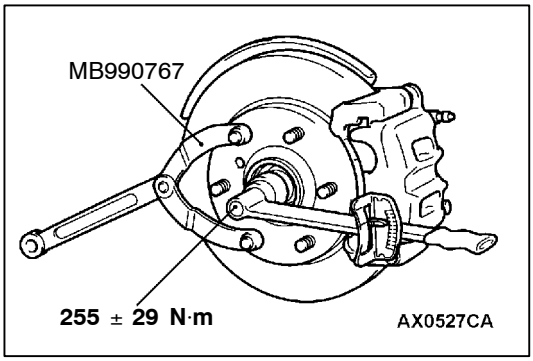

2. Tighten up castle nut with special tools.

   Caution
   Do not apply pressure to wheel bearing by the vehicle weight to avoid possible damage before tightening up castle nut.
3. In this case, if the pin holes do not match, tighten the nut to 284 N·m and find the most suitable hole to bend the nut with a split pin.

INSPECTION

- Check the boot for damage or deterioration.
- Check the ball joint for operating condition and excessive looseness.
- Check the splines for wear or damage.
- Check the differential carrier oil seal (L.H.) for damage.

DISASSEMBLY AND REASSEMBLY

Caution
Never disassemble the U.J. assembly except when replacing the U.J. boot.

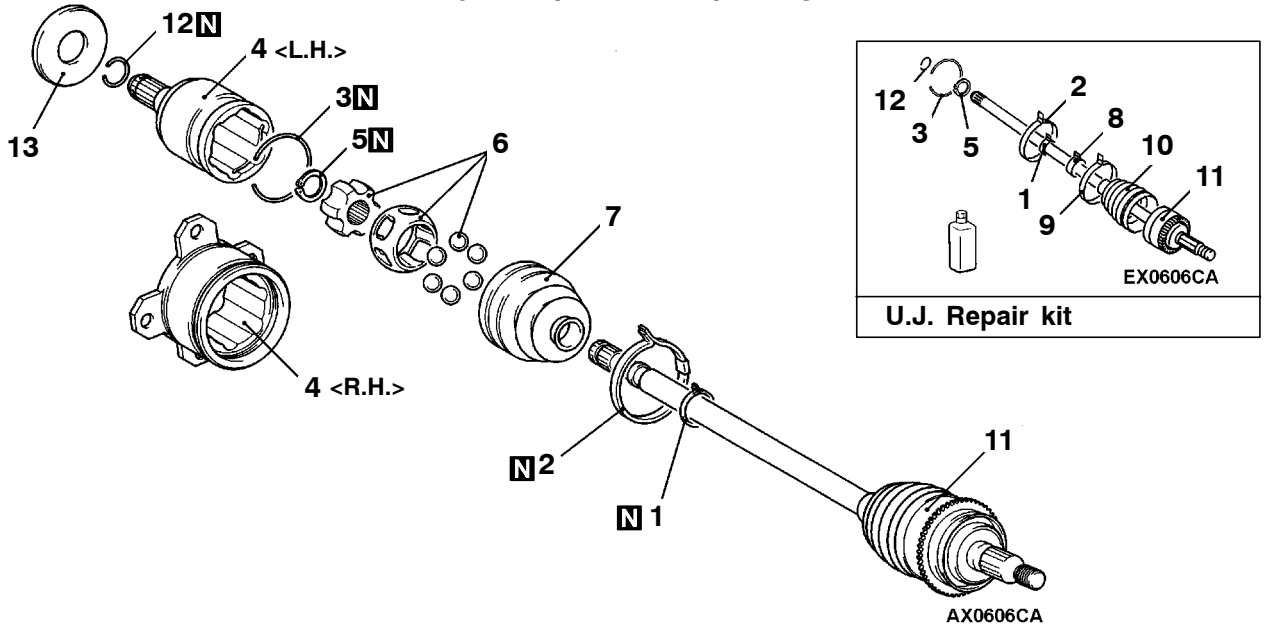

U.J. Repair kit

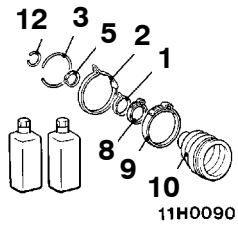

U.J. boot repair kit

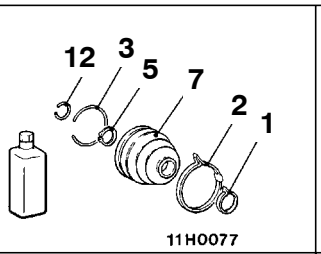

D.O.J. boot repair kit

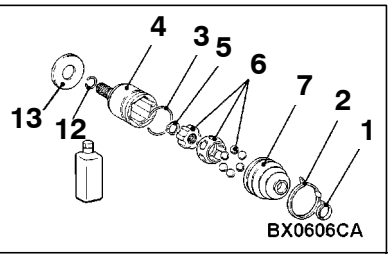

D.O.J. repair kit

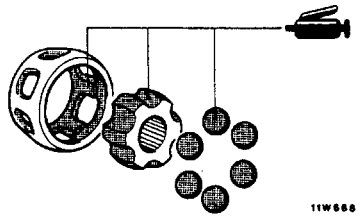

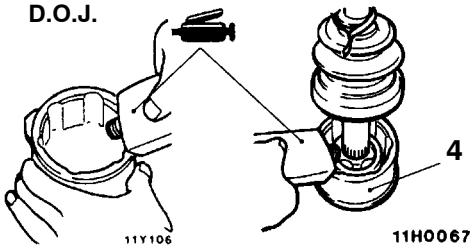

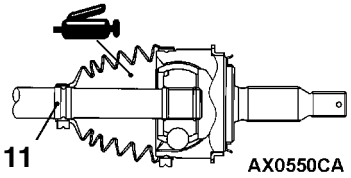

Grease: repair kit grease	Grease: Repair kit grease Quantity: <U.J.>4M41-M/T: 180 ± 10 g (90 ± 5 g inside joint, 90 ± 5 g inside boot), 4M41-A/T, 4D5 6G7:135 ± 10 g (65 ± 5 g inside joint, 70 ± 5 g inside boot) <D.O.J.>4M41-M/T: 135 ± 10 g (75 ± 5 g inside joint, 60 ± 5 g inside boot), 4M41-A/T, 4D5 6G7:100 ± 10g (60 ± 5 g inside joint, 40 ± 5 g inside boot)

Caution
Do not mix old and new or different types of grease, as a special grease is used in the joint.

Disassembly steps

▶B◀ 1. D.O.J. boot band (small)
▶B◀ 2. D.O.J. boot band (large)
3. Circlip
4. D.O.J. outer race
5. Snap ring
6. Inner race, cage and ball assembly
◀A▶ ▶A◀ 7. D.O.J. boot
8. U.J. boot band (small)
9. U.J. boot band (large)
10. U.J. boot
11. U.J. assembly
12. Circlip <L.H.>
13. Circlip <L.H.>

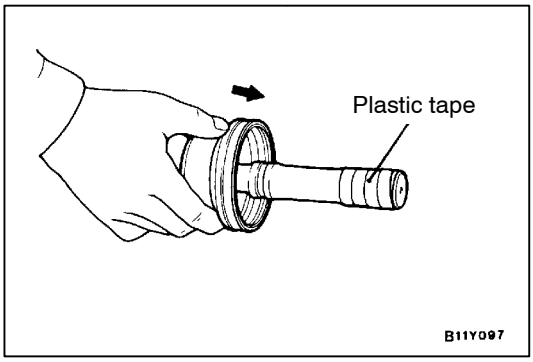

DISASSEMBLY SERVICE POINT

◀A▶ D.O.J. BOOT REMOVAL

Wrap plastic tape around the spline part on the U.J. assembly so that D.O.J. boot is not damaged when they are removed.

REASSEMBLY SERVICE POINTS

▶A◀ D.O.J. BOOT INSTALLATION

Install boot after wrapping plastic tape around the spline part on the U.J. assembly.

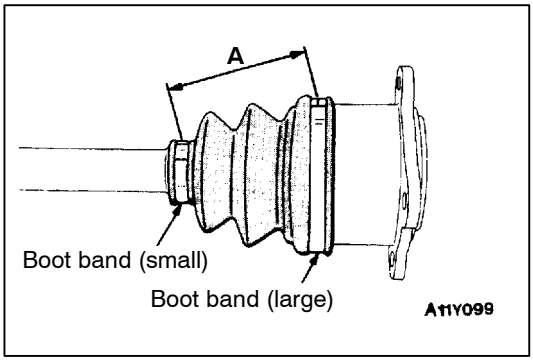

▶B◀ D.O.J. BOOT BAND/D.O.J. BOOT BAND INSTALLATION

1. Position the D.O.J. outer race so that the distance between the boot bands is at the standard value.

   Standard value (A): 80 ± 5 mm

2. Remove part of the D.O.J. boot from the D.O.J. outer race to release the air pressure inside the boot.

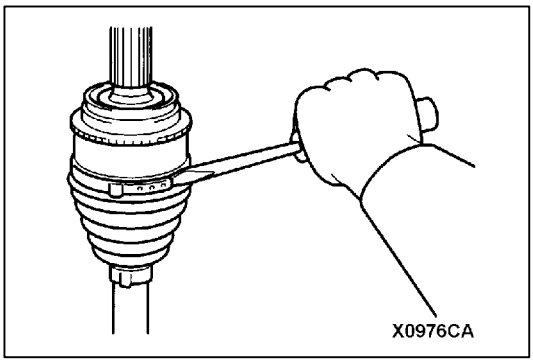

U.J. BOOT (RESIN BOOT) REPLACEMENT

1. Remove the boot bands (large and small).

   NOTE
   The B.J. boot bands cannot be re-used.

2. Remove the B.J. boot.

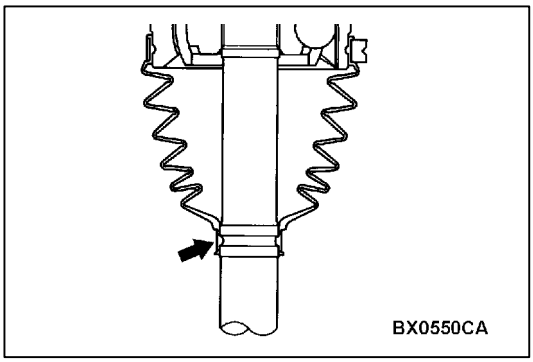

3. Install the small part on the plastic boot aligning the groove of the shaft.

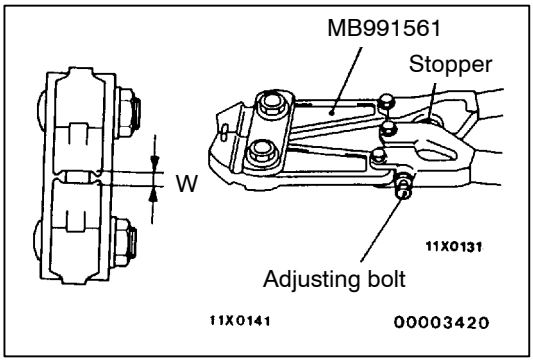

4. Turn the adjusting bolt on the special tool so that the size of the opening (W) is at the standard value.

   Standard value (W): 2.9 mm
   <If it is larger than 2.9 mm>
   Tighten the adjusting bolt.
   <If it is smaller than 2.9 mm>
   Loosen the adjusting bolt.

   NOTE
   (1) The value of W will change by approximately 0.7 mm for each turn of the adjusting bolt.
   (2) The adjusting bolt should not be turned more than once.

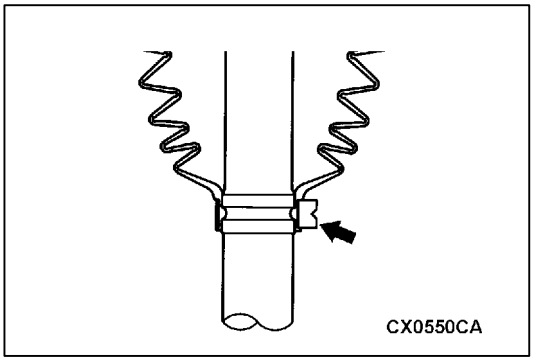

5. Install the U.J. boot band (small) to the U.J. boot.

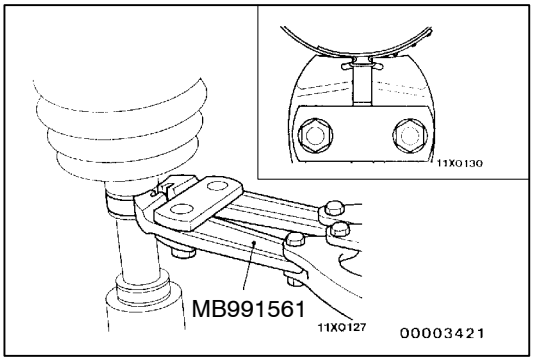

6. Use the special tool to crimp the U.J. boot band (small).

   Caution
   (1) Secure the drive shaft in an upright position and clamp the part of the U.J. boot band to be crimped securely in the jaws of the special tool.
   (2) Crimp the U.J. boot band until the special tool touches the stopper.

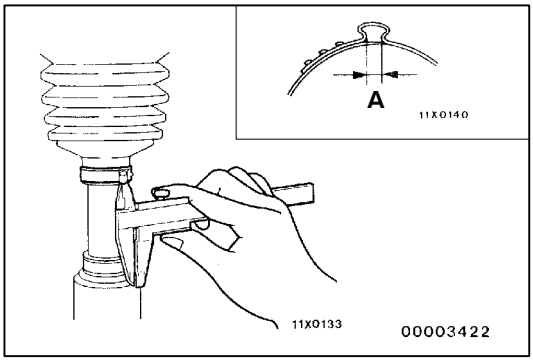

7. Check that crimping amount (A) of the U.J. boot band is at the standard value.

   Standard value (A): 2.4 - 2.8 mm
   <If the crimping amount is larger than 2.8 mm>
   Readjust the value of (W) in step (4) according to the following formula, and then repeat the operation in step (6).
   W = 5.5 mm - A
   Example: If A = 2.9 mm, then W = 2.6 mm.

<If the crimping amount is smaller than 2.4 mm>
Remove the U.J. boot band, readjust the value of (W) in step (4) according to the following formula, and then repeat the operations in steps (5) and (6) using a new B.J. boot band.
W = 5.5 mm - A
Example: If A = 2.3, then W = 3.2 mm.

8. Check that the U.J. boot band is not sticking out past the place where it has been installed.
   If the U.J. boot band is sticking out, remove it and then repeat the operations in steps (4) to (7) using a new U.J. boot band.
9. Fill the inside of the U.J. boot with the specified amount of the specified grease.

   Specified grease: Repair kit grease

   Amount to use:
   Vehicles with 4M41-M/T: 180 ± 10 g
   (90 ± 5 g inside joint, 90 ± 5 g inside boot)
   Vehicles with 4M41-A/T, 4D5 6G7: 135 ± 10 g
   (65 ± 5 g inside joint, 70 ± 5 g inside boot)

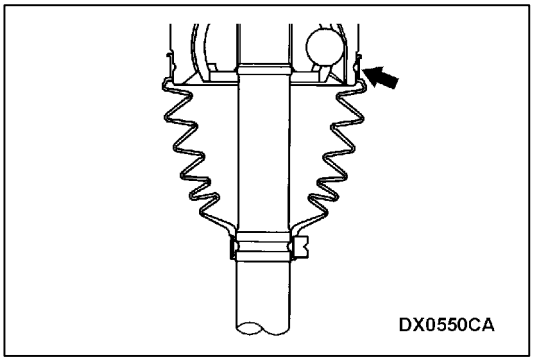

10. Install the large diameter part on the plastic boot alighning the groove of the shaft.
11. Follow the same procedure as in step (4) to adjust the size of the opening (W) on the special tool so that it is at the standard value.

    Standard value (W): 3.2 mm

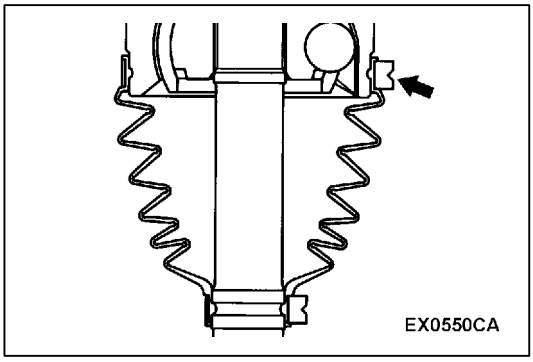

12. Install the U.J. boot band (large) to the U.J. boot.
13. Use the special tool to crimp the U.J. boot band (large) in the same way as in step (6).

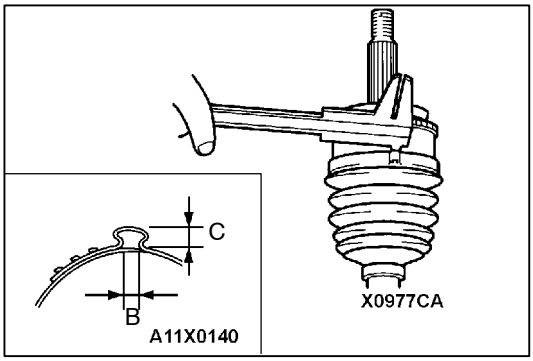

14. Check that the crimping amount (B) of the U.J. boot band is at the standard value and that the crimping amount (C) of the U.J. boot band is at the limited value

    Standard value (B): 2.4 - 2.8 mm

    Limit (C): 9.5 mm

<If the crimping amount is larger than 2.8 mm>
Readjust the value of (W) in step (11) according to the following formula, and then repeat the operation in step (13).
W = 5.8 mm - B
Example: If B = 2.9 mm, then W = 2.9 mm.

<If the crimping amount is smaller than 2.4 mm>
Remove the U.J. boot band, readjust the value of (W) in step (11) according to the following formula, and then repeat the operations in steps (12) and (13) using a new U.J. boot band.
W = 5.8 mm - B
Example: If B = 2.3 mm, then W = 3.5mm.

15. Check that the U.J. boot band is not sticking out past the place where it has been installed.
    If the U.J. boot band is sticking out, remove it and then repeat the operations in steps (12) to (14) using a new U.J. boot band.

INNER SHAFT, HOUSING TUBE

REMOVAL AND INSTALLATION

Caution

***: Indicates parts which should be temporarily tightened, and then fully tightened with the vehicle on the ground in the unladen condition.**

Pre-removal and Post-installation Operation
- Under Cover and Skid Plate Removal and Installation
- Drive Shaft <R.H.> Removal and Installation (Refer to P.26-16.)

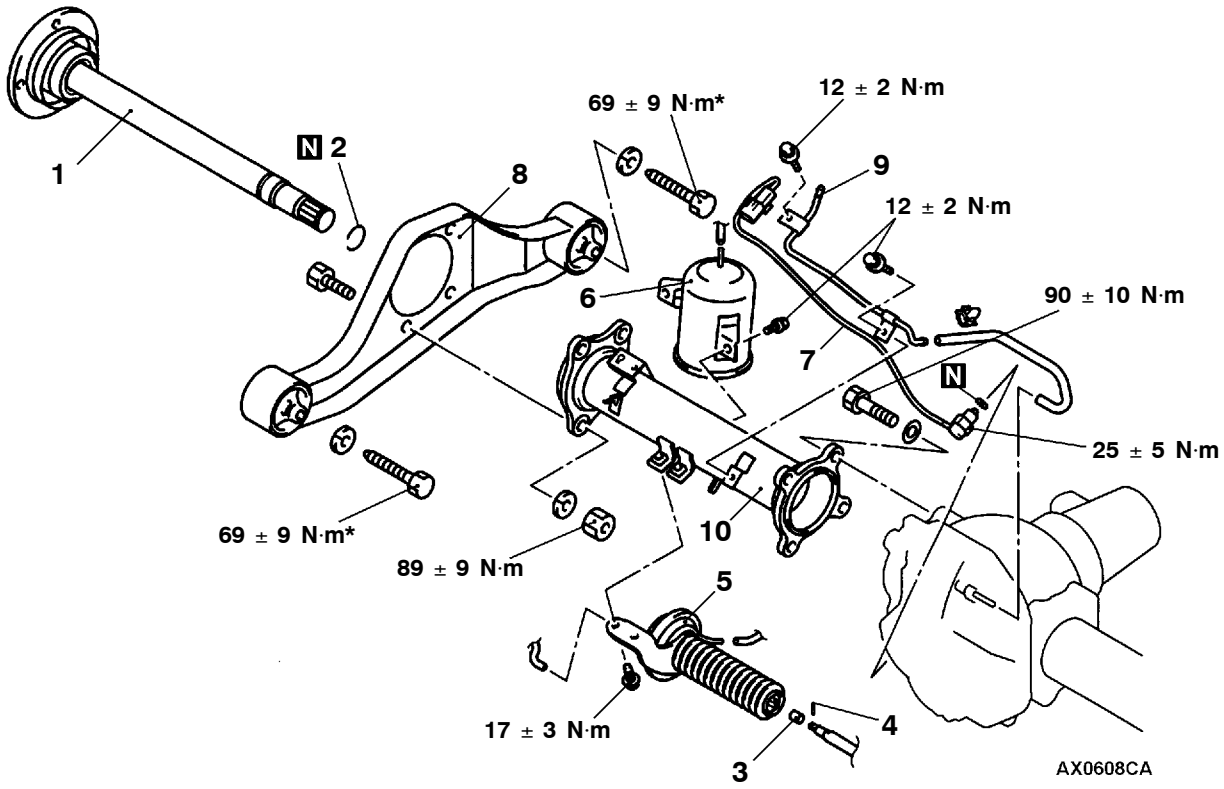

Removal steps

◀A▶ ▶B◀
1. Inner shaft
2. Clip
3. Collar
4. Pin
5. Actuator assembly
6. Vacuum tank assembly
7. Engage switch assembly

◀B▶ ▶A◀
- Loosening and tightening of differential mounting insulator bolt
- Support the differential by a transmission jack.

8. Differential mounting bracket <R.H.>
9. Breather pipe
12. Housing tube

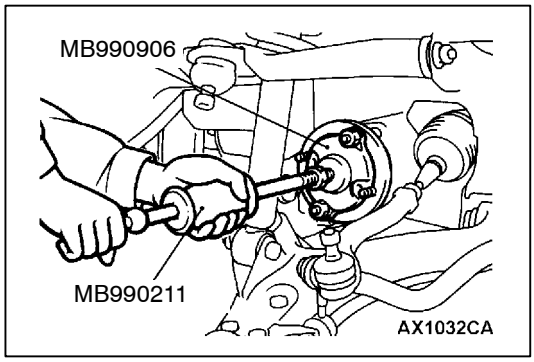

REMOVAL SERVICE POINTS

◀A▶ INNER SHAFT REMOVAL

Caution
When pulling the inner shaft out from the front differential carrier, be careful that the spline part of the inner shaft does not damage the oil seal.

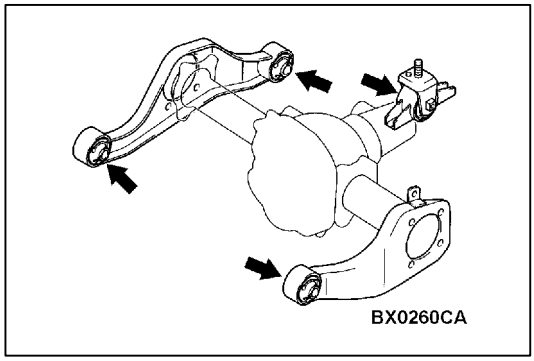

◀B▶ DIFFERENTIAL MOUNTING INSULATOR BOLT LOOSENING

Loose the bolt shown in the diagram.

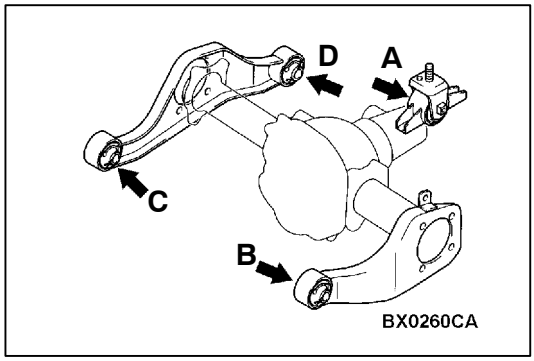

INSTALLATION SERVICE POINT

▶A◀ DIFFERENTIAL MOUNTING INSULATOR BOLT TIGHTENING

Tighten the bolts shown in the diagram in the serivce specification in the order of A, B, C, D or A, C, B, D.

Tightening torque: 69 ± 9 N·m

Caution
Place the vehicle on the ground after temporarily tighten bolts to prevent bushes from twisting and fully tighten the bolts in the unladen condition.

▶B◀ INNER SHAFT INSTALLATION

Caution
Be careful not to damage the lip of the dust seal and oil seal.

DISASSEMBLY AND REASSEMBLY

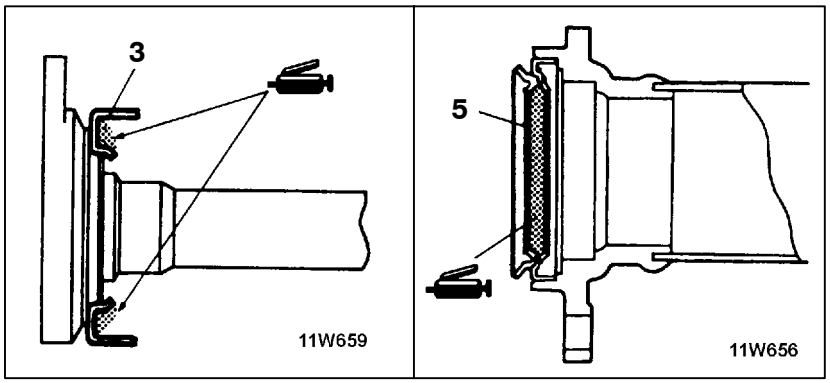

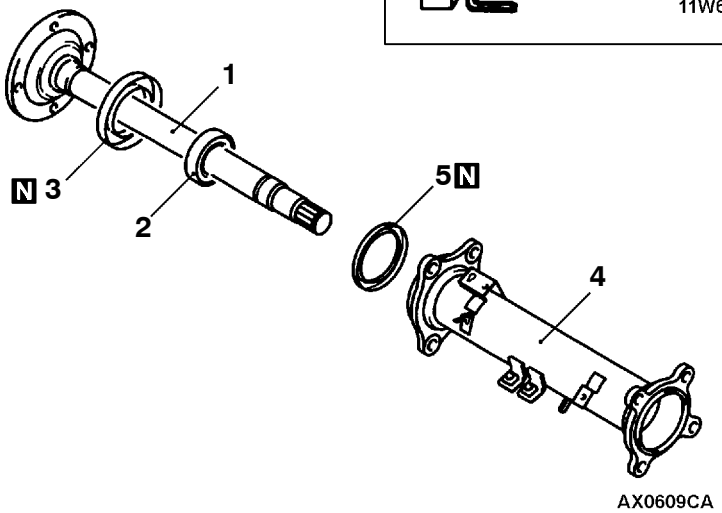

Disassembly steps

1. Inner shaft
2. ◀A▶ ▶C◀ Bearing
3. ▶B◀ Dust cover
4. Housing tube
5. ▶A◀ Dust seal

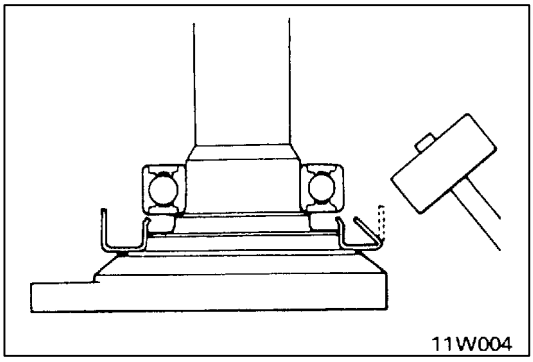

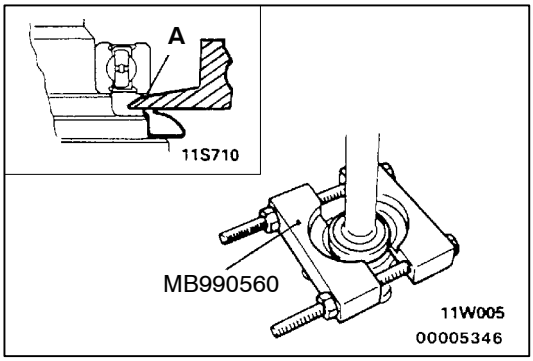

DISASSEMBLY SERVICE POINT

◀A▶ BEARING REMOVAL

1. Bend the outside periphery of dust cover inward with a hammer.
2. After the special tool has been installed as shown, tighten the nut of the special tool until the portion “A” of the special tool touches the bearing outer race.

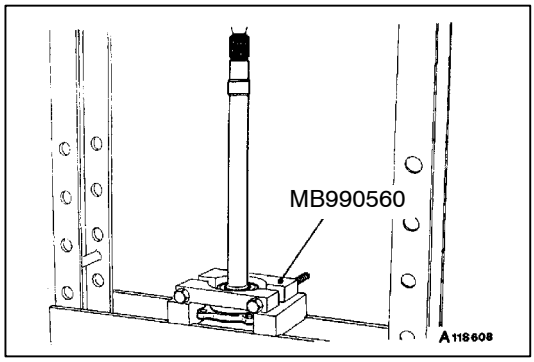

3. Press out the inner shaft from the bearing.

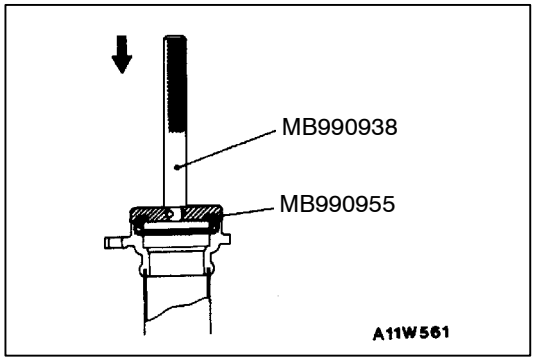

REASSEMBLY SERVICE POINTS

▶A◀ DUST SEAL INSTALLATION

Press-fit the new dust seal into the housing tube by using the special tools, until it is flush with the housing tube end face.

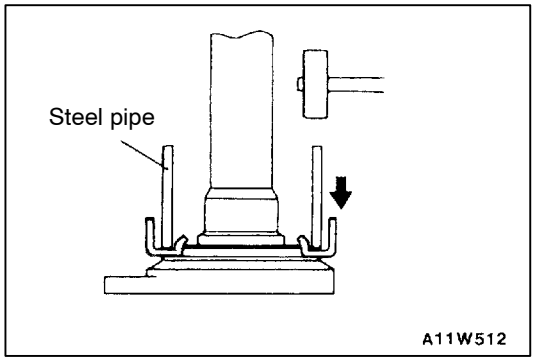

▶B◀ DUST COVER INSTALLATION

Using a steel pipe, force a new dust cover onto the inner shaft.

Steel pipe	mm
Overall length	50
Outside diameter	75
Wall thickness	4

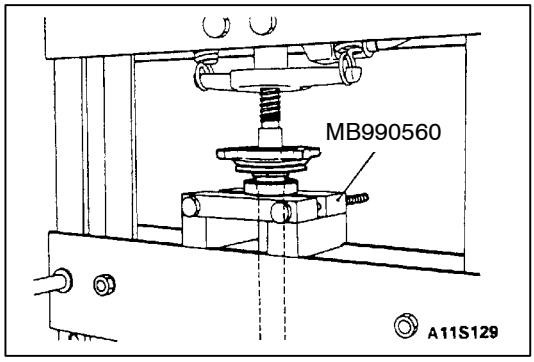

▶C◀ BEARING INSTALLATION

FREEWHEEL CLUTCH ASSEMBLY, DIFFERENTIAL CARRIER

REMOVAL AND INSTALLATION

Caution

***: Indicates parts which should be temporarily tightened, and then fully tightened with the vehicle on the ground in the unladen condition.**

Pre-removal and Post-installation
- Under Cover and Skid Plate Removal and Installation
- Gear Oil Draining and Refill (Refer to P.26-11.)
- Drive Shaft Removal and Installation (Refer to P.26-16.)
- Inner Shaft Removal and Installation (Refer to P.26-24.)

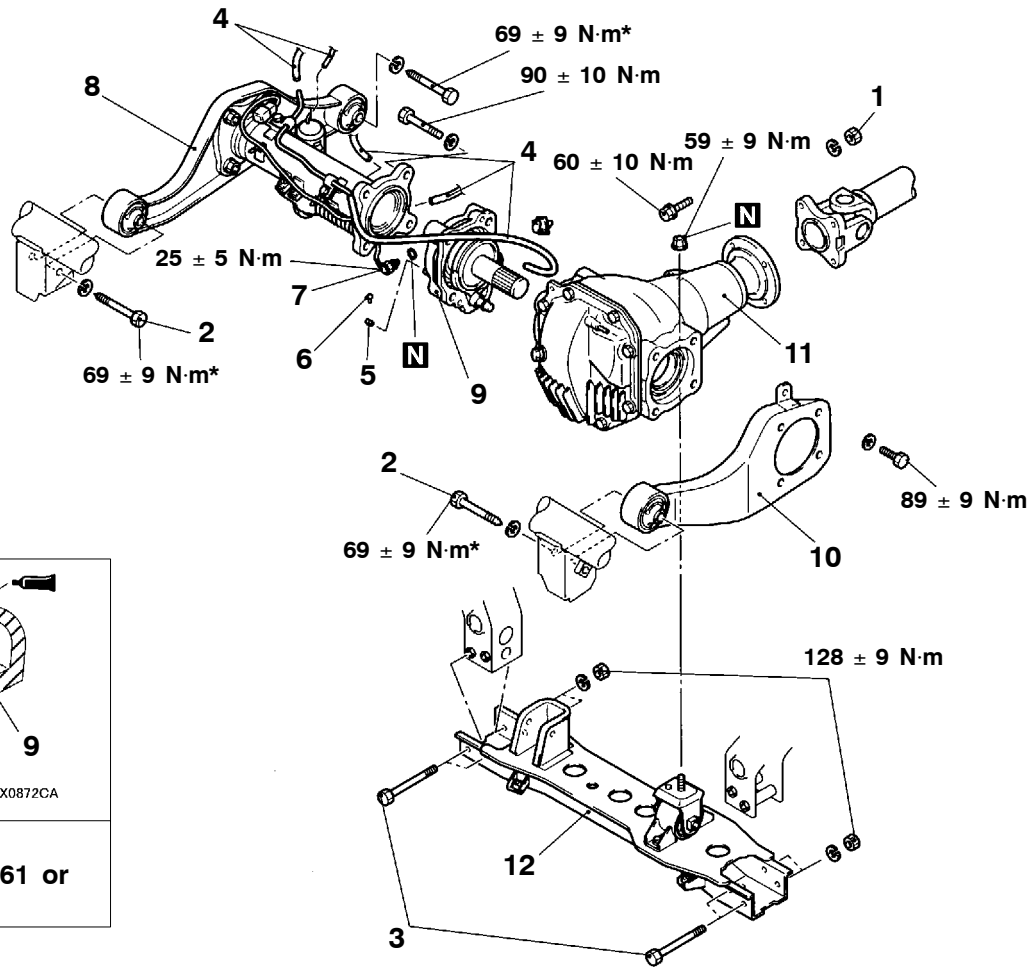

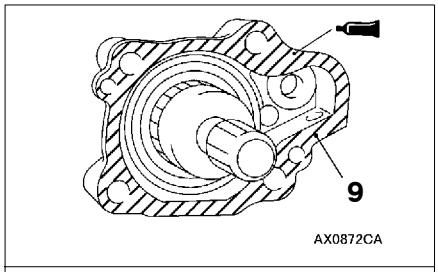

Sealant:
3M ATD Part No. 8661 or equivalent

Removal steps

◀A▶ ▶B◀ 1. Front propeller shaft connection
2. Front frame and differential bracket connection
3. Front frame and No.2 crossmember assembly connection
4. Vacuum hose
5. Collar
◀B▶ 6. Pin
7. Freewheel engage switch assembly
▶A◀ 8. Differential mounting bracket <R.H.> and housing tube assembly
9. Freewheel clutch assembly
▶A◀ 10. Differential mounting bracket <L.H.>
11. Differential carrier
12. No.2 crossmember assembly

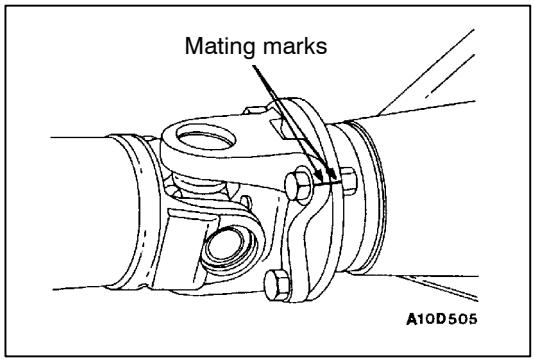

REMOVAL SERVICE POINTS

◀A▶ FRONT PROPELLER SHAFT DISCONNECTION

Make the mating marks on the flange yoke and the differential carrier companion flange and then remove the front propeller shaft.

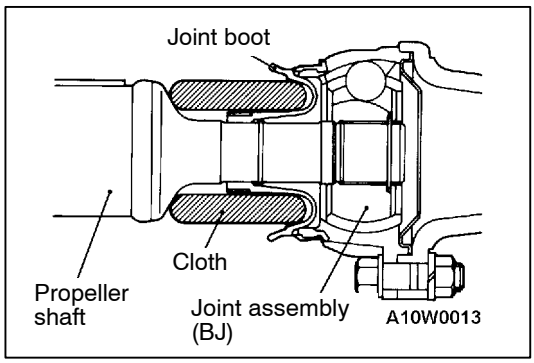

Caution

1. **Be careful not to damage joint boot by cramping with the bent propeller shaft joint.**
2. **Hang propeller shaft with wires to prevent it from falling.**

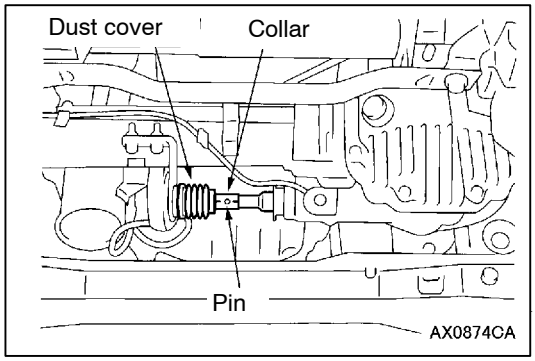

◀B▶ PIN REMOVAL

1. Remove one side of dust cover mounting part on the Vaccum Actuator Assembly.
2. Match a pin with a pin hole and remove the pin with with a punch.

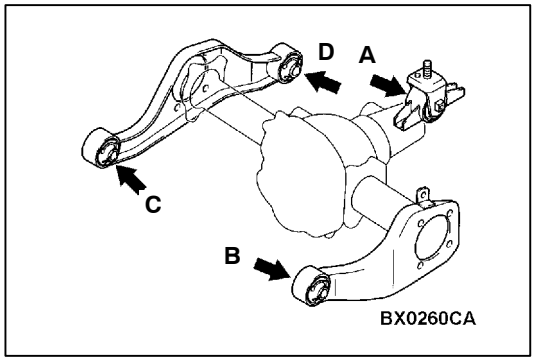

INSTALLATION SERVICE POINTS

▶A◀ DIFFERENTIAL MOUNTING BRACKET ASSEMBLY TIGHTENING

Tighten differential mounting insulator in the order of A, B, C, D or A, C, B, D as shown in the left diagram.

▶B◀ FRONT PROPELLER SHAFT INSTALLATION

Install the front propeller shaft so that the mating marks of the flange yoke and the differential carrier companion flange are aligned.

Caution

Do not tighten fasteners without removing grease from threads because fastner threads covered with oily products could become loose.

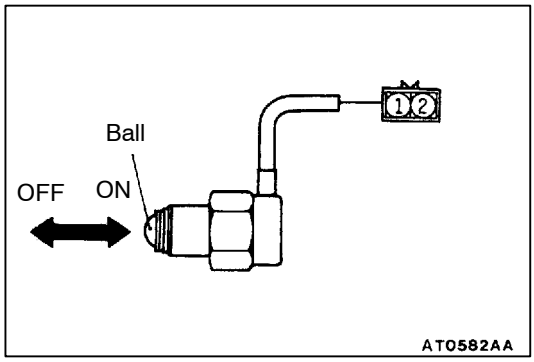

INSPECTION

FREEWHEEL ENGAGE SWITCH

Shaft (switch) position	Terminal No. 1	Terminal No. 2
Pressed (ON)	○———	———○
Released (OFF)		

FREEWHEEL CLUTCH ASSEMBLY

DISASSEMBLY AND REASSEMBLY

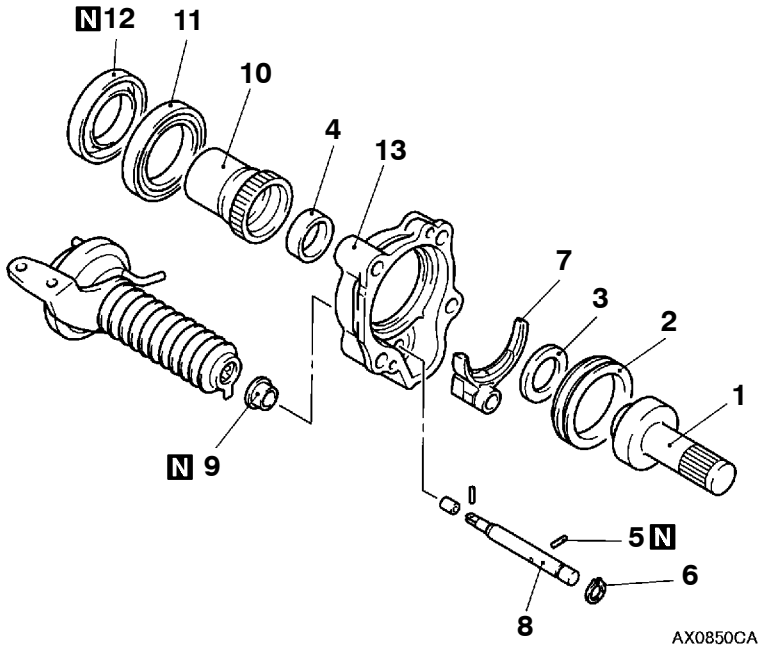

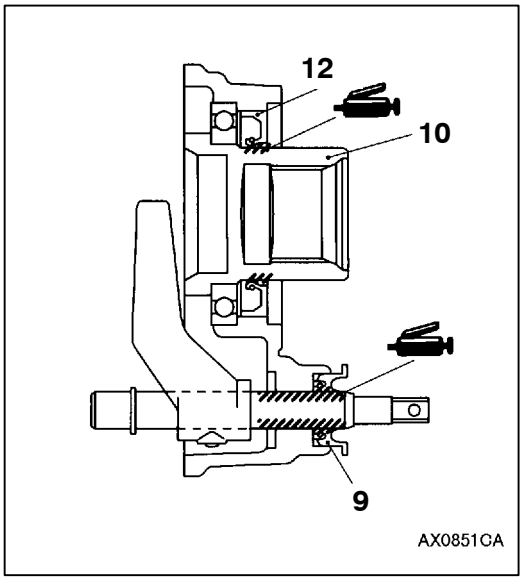

Disassembly steps

◀A▶ 1. Main shaft
2. Clutch sleeve
3. Spacer
◀A▶ ▶E◀ 4. Bearing
▶D◀ 5. Spring pin
6. Snap ring
7. Shift fork
8. Shift rod
▶C◀ 9. Oil seal
◀B▶ ▶B◀ 10. Clutch gear
◀B▶ ▶B◀ 11. Bearing
▶A◀ 12. Oil seal
13. Clutch housing

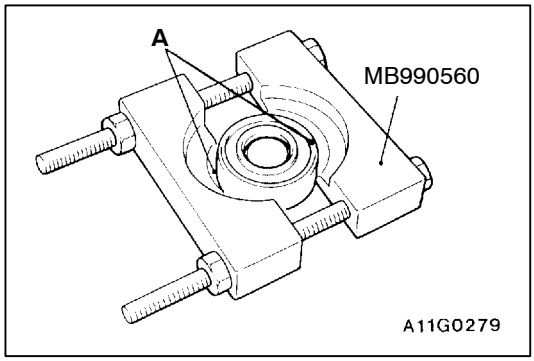

DISASSEMBLY SERVICE POINTS

◀A▶ MAINSHAFT/BEARING REMOVAL

1. After the special tool has been installed as shown, tighten the nut of the special tool until the portion “A” of the special tool touches the bearing outer race.

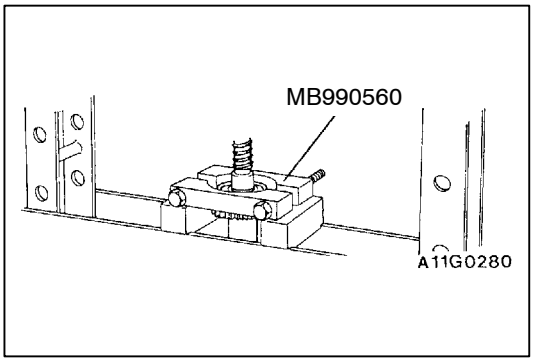

2. Press out the mainshaft from the bearing.

Caution
Do not allow the mainshaft to drop.

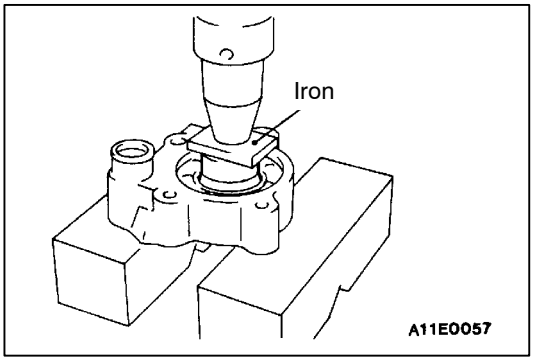

◀B▶ CLUTCH GEAR/BEARING REMOVAL

1. Use a press and steel plate to remove the clutch gear and bearing together.

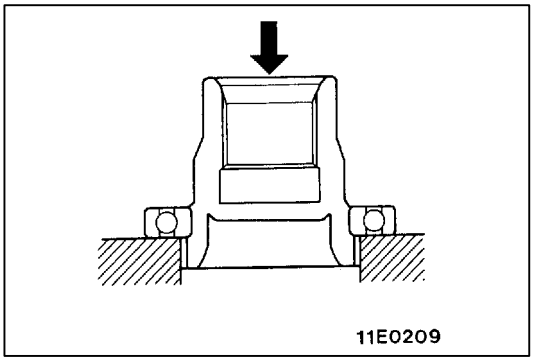

2. Use a press to hold the supports against the bearing inner race, and separate the clutch gear and bearing.

REASSEMBLY SERVICE POINTS

▶A◀ OIL SEAL INSTALLATION

Use the special tool to tap the oil seal until it is flush with the clutch housing.

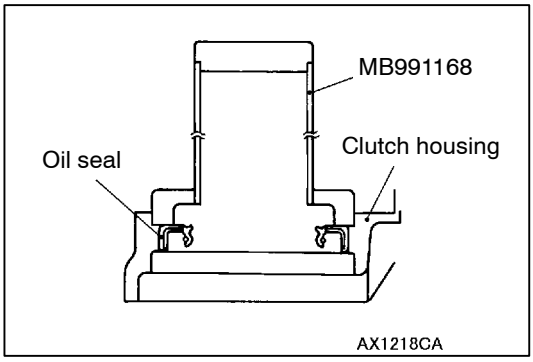

▶B◀ BEARING/CLUTCH GEAR INSTALLATION

1. Use the special tool to press-fit the bearing to the shoulder of the clutch gear.

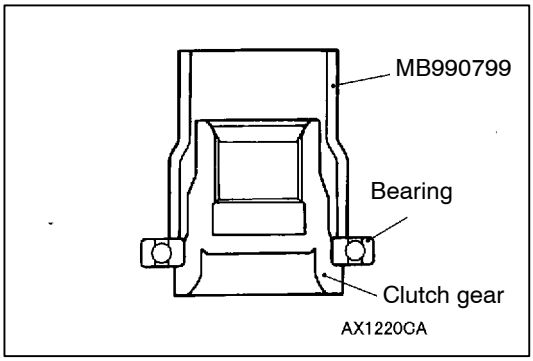

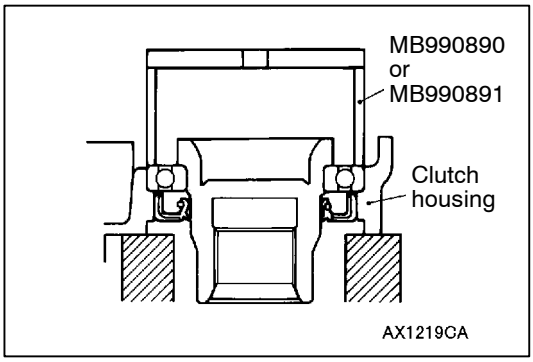

2. Use the special tool to press-fit the bearing to the side of the clutch housing.

Caution
Place the special tool against the outer race of the bearing.

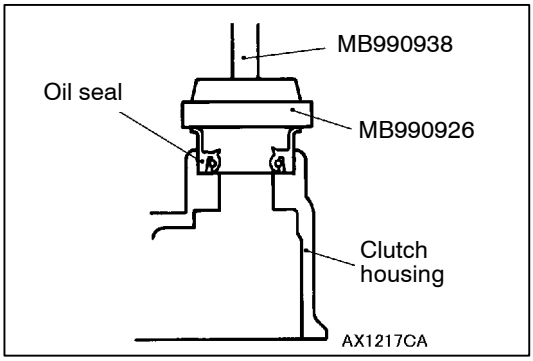

▶C◀ OIL SEAL INSTALLATION

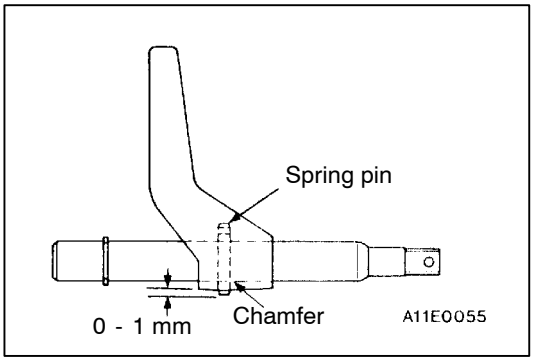

▶D◀ SPRING PIN INSTALLATION

Tap the spring pin from the chamfered side of the shift rod until the projection length becomes length shown in the illustration.

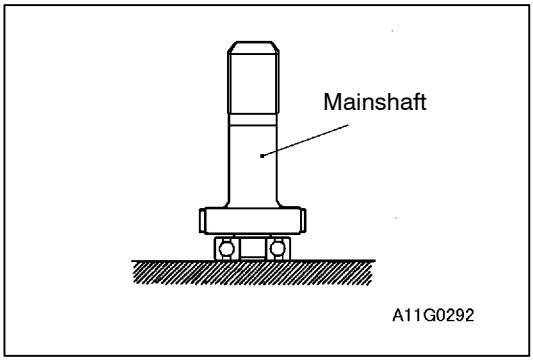

▶E◀ BEARING INSTALLATION

Press-fit the bearing to the shoulder of the mainshaft.

DIFFERENTIAL CARRIER

DISASSEMBLY

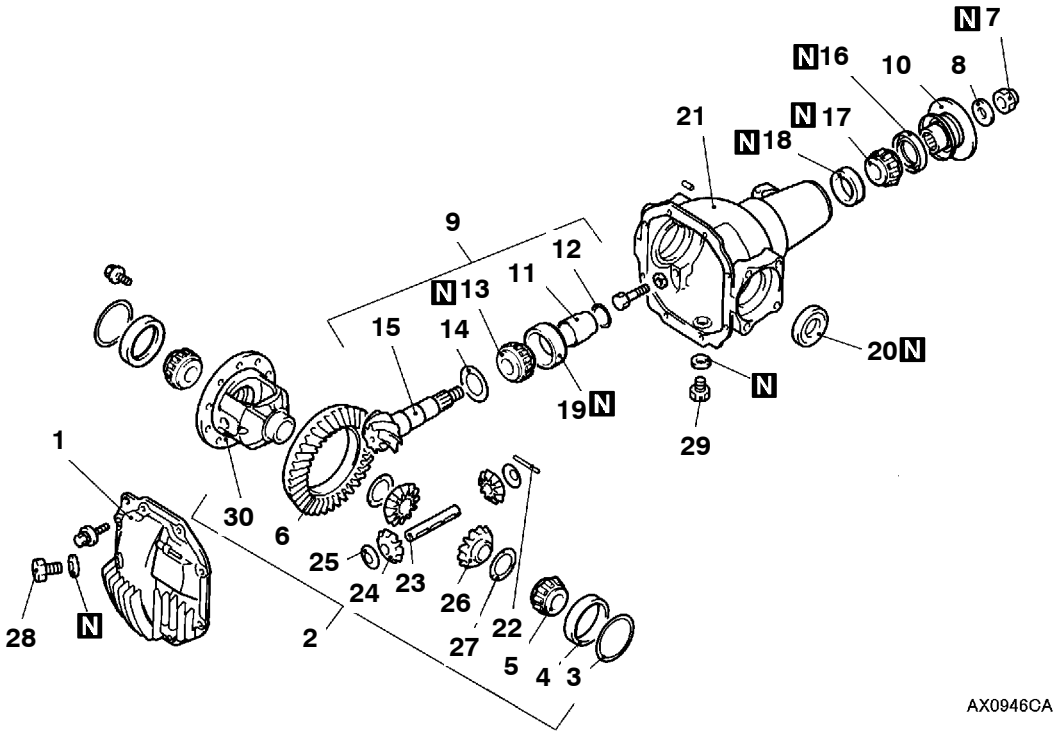

Disassembly steps

◀A▶ ● Inspection before disassembly
1. Cover
◀B▶ 2. Differential case assembly
3. Side bearing spacer
4. Side bearing outer race
◀C▶ 5. Side bearing inner race
◀D▶ 6. Drive gear
◀E▶ 7. Self-locking nut
8. Washer
◀F▶ 9. Drive pinion assembly
10. Companion flange
11. Drive pinion spacer
12. Drive pinion rear shim (for turning torque adjustment)
◀G▶ 13. Drive pinion front bearing inner race
14. Drive pinion front shim (for pinion height adjustment)
15. Drive pinion
◀H▶ 16. Oil seal
◀H▶ 17. Drive pinion rear bearing inner race
◀H▶ 18. Drive pinion rear bearing outer race
◀I▶ 19. Drive pinion front bearing outer race
20. Oil seal
21. Differential carrier
◀J▶ 22. Lock pin
23. Pinion shaft
24. Pinion gear
25. Pinion washer
26. Side gear
27. Side gear spacer
28. Filler plug
29. Drain plug
30. Differential case

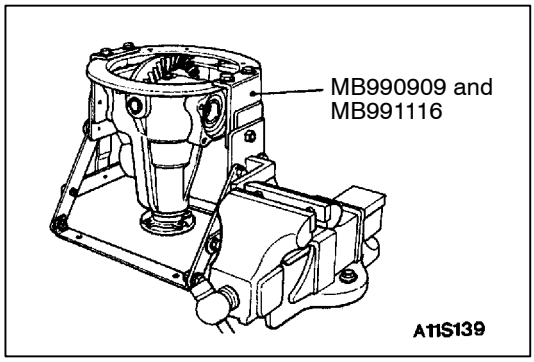

DISASSEMBLY SERVICE POINTS

◀A▶ INSPECTION BEFORE DISASSEMBLY

1. Remove the cover and gasket.
2. Hold the special tool in a vise, and install the differential carrier assembly to the special tool.

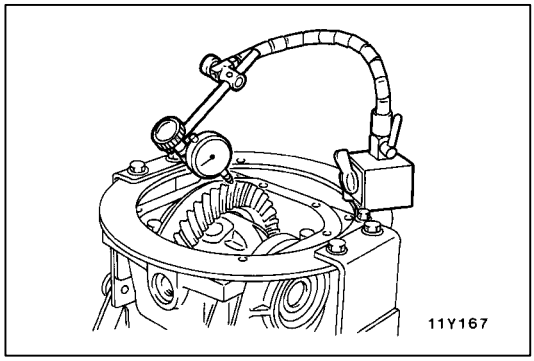

DRIVE GEAR BACKLASH

1. With the drive pinion locked in place, use a dial gauge to measure the drive gear backlash in four or more places on the drive gear.

   Standard value: 0.11 - 0.16 mm

2. If the backlash is not within the standard value, adjust the drive gear backlash (See P.26-47).
3. After the adjustment, inspect the drive gear tooth contact.

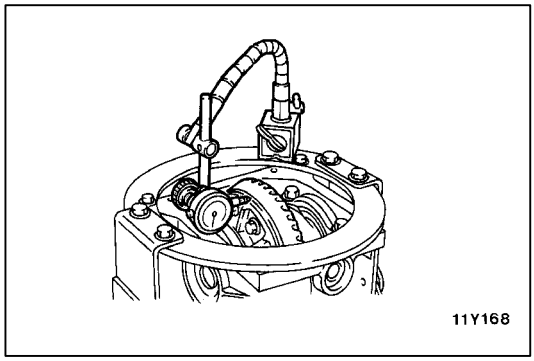

DRIVE GEAR RUNOUT

1. Measure the drive gear runout at the shoulder on the reverse side of the drive gear.

   Limit: 0.05 mm

2. When runout exceeds the limit value, check for foreign object between drive gear rear side and differential case, or for loose drive gear installation bolts.
3. When check (2) gives normal results, reposition drive gear and differential case and remeasure.
4. If adjustment is impossible, replace differential case, or replace drive gear and pinion as a set.

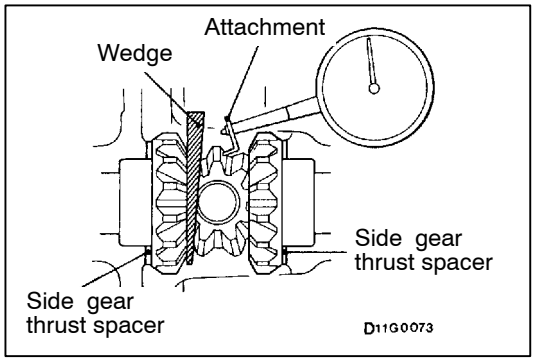

DIFFERENTIAL GEAR BACKLASH

1. While locking the side gear with the wedge, measure the differential gear backlash with a dial indicator on the pinion gear.

   Standard value: 0 - 0.076 mm
   Limit: 0.2 mm

   Repeat the same procedure for both pinion gears.

2. If the backlash exceeds the limit, adjust by using the side gear thrust spacers.
3. If adjustment is impossible, replace the side gear and pinion gear as a set.

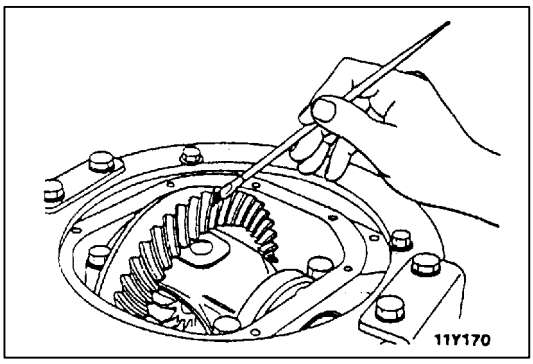

DRIVE GEAR TOOTH CONTACT

Check the tooth contact of drive gear by following the steps below.

1. Apply a thin, uniform coat of machine blue to both surfaces of the drive gear teeth.

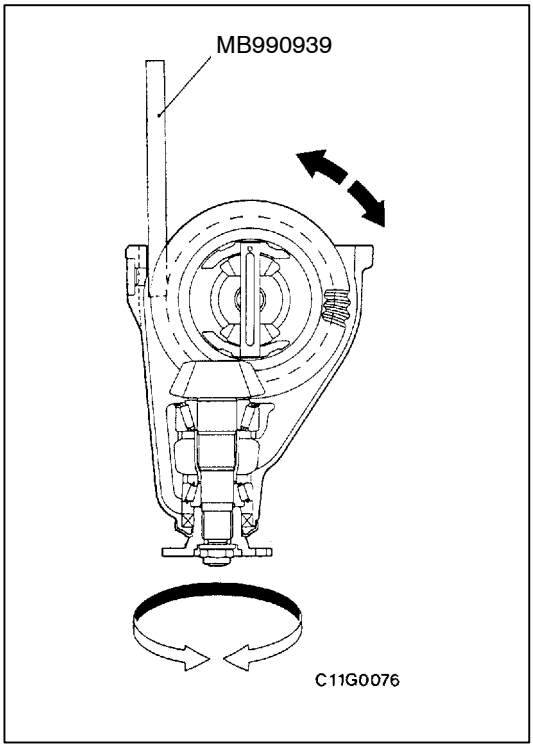

2. Insert the brass between the differential carrier and the differential case, and then rotate the companion flange by hand (once in the normal direction, and then once in the reverse direction) while applying a load to the drive gear so that the revolution torque (approximate 2.5 - 3.0 N·m) is applied to the drive pinion.

   Caution
   If the drive gear is rotated too much, the tooth contact pattern will become unclear and difficult to check.

3. Check the tooth contact condition of the drive gear and drive pinion.

Standard tooth contact pattern	Problem	Solution
1 Narrow tooth side 2 Drive-side tooth surface (the side applying power during forward movement) 3 Wide tooth side 4 Coast-side tooth surface (the side applying power during reverse movement) 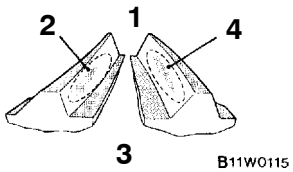	Tooth contact pattern resulting from excessive pinion height 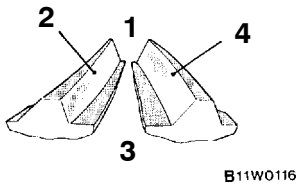 The drive pinion is positioned too far from the centre of the drive gear.	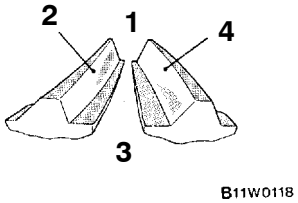 Increase the thickness of the drive pinion rear shim, and position the drive pinion closer to the centre of the drive gear. Also, for backlash adjustment, position the drive gear farther from the drive pinion.
	Tooth contact pattern resulting from insufficient pinion height 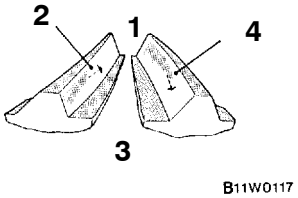 The drive pinion is positioned too close to the centre of the drive gear.	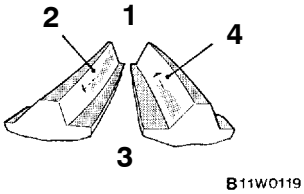 Decrease the thickness of the drive pinion rear shim, and position the drive pinion farther from the centre of the drive gear. Also, for backlash adjustment, position the drive gear closer to the drive pinion.

NOTE

Checking the tooth contact pattern is the way to confirm that the adjustments of the pinion height and backlash have been done properly. Continue to adjust the pinion height and backlash until the tooth contact pattern resembles the standard pattern.

If, even after adjustments have been made, the correct tooth contact pattern cannot be obtained, it means that the drive gear and the drive pinion have become worn beyond the allowable limit. Replace the gear set.

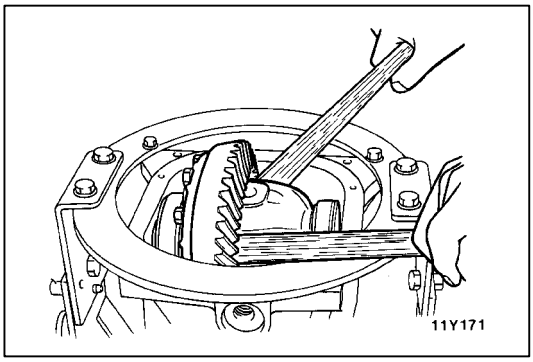

◀B▶ DIFFERENTIAL CASE ASSEMBLY REMOVAL

Caution
When taking out the differential case assembly, be careful not to drop and damage the side bearing outer races.

NOTE
Keep the right and left side bearings and side bearing adjusting spacers separate, so that they do not become mixed at the time of reassembly.

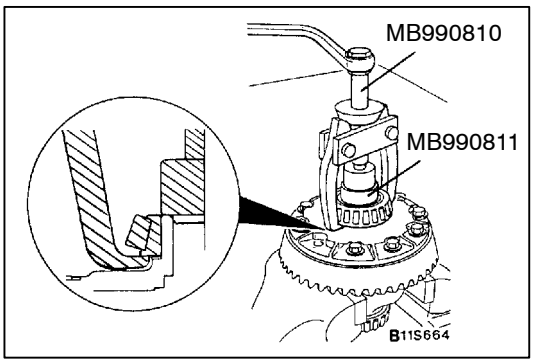

◀C▶ SIDE BEARING INNER RACE REMOVAL

NOTE
There are two notches provided (at the differential case side) for the claw part of the special tool; use the special tool at that position.
If notches of special tools touch the end of differential case and fail to hook with inner race, file the notches to be able to hook with inner race.

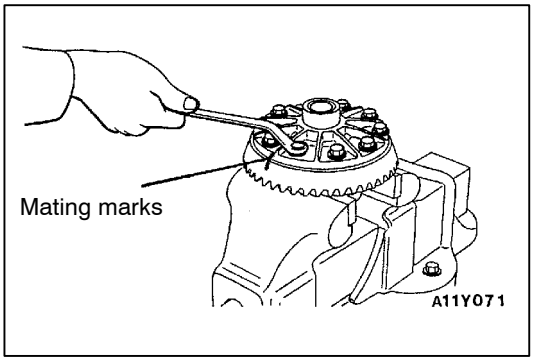

◀D▶ DRIVE GEAR REMOVAL

1. Make the mating marks to the differential case and the drive gear.
2. Loosen the drive gear attaching bolts in diagonal sequence to remove the drive gear.

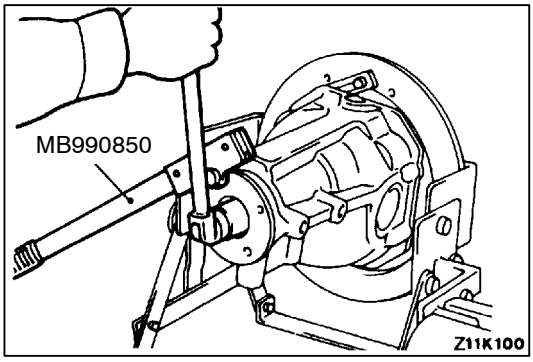

◀E▶ SELF-LOCKING NUT REMOVAL

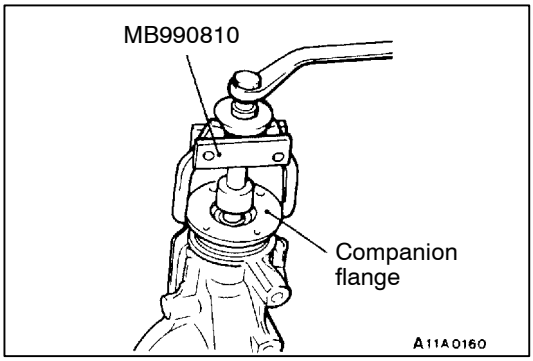

◀F▶ DRIVE PINION ASSEMBLY REMOVAL

1. Make mating marks on the drive pinion and companion flange.

   Caution
   The mating mark made on the companion flange must not be on the coupling surface of the flange yoke and the front propeller shaft.

2. Pull out the drive pinion together with the special tool.

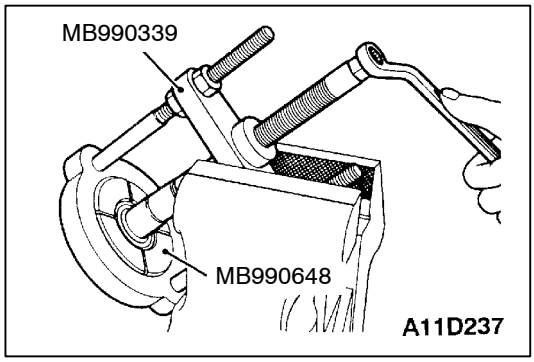

◀G▶ DRIVE PINION FRONT BEARING INNER RACE REMOVAL

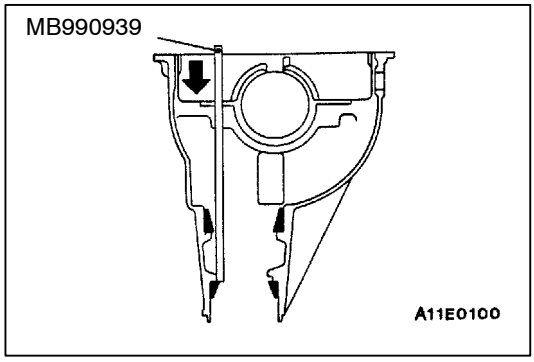

◀H▶ OIL SEAL/DRIVE PINION REAR BEARING INNER RACE/DRIVE PINION REAR BEARING OUTER RACE REMOVAL

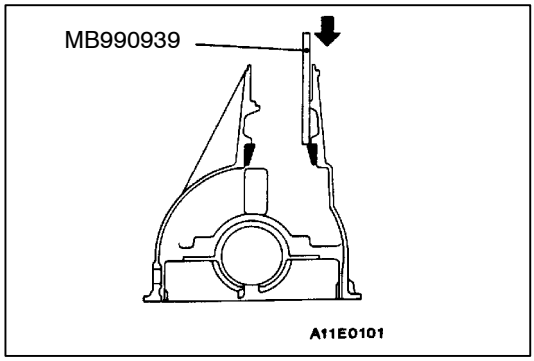

◀I▶ DRIVE PINION FRONT BEARING OUTER RACE REMOVAL

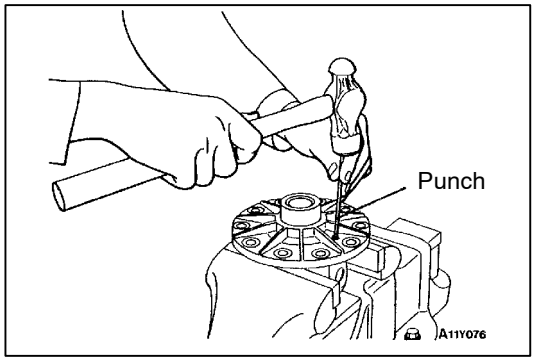

◀J▶ LOCK PIN REMOVAL

REASSEMBLY

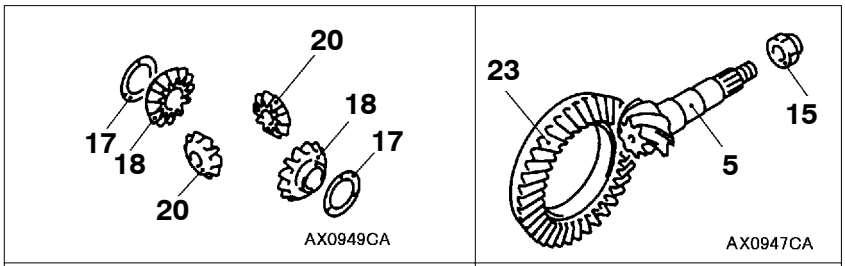

Differential gear set	Final drive gear set

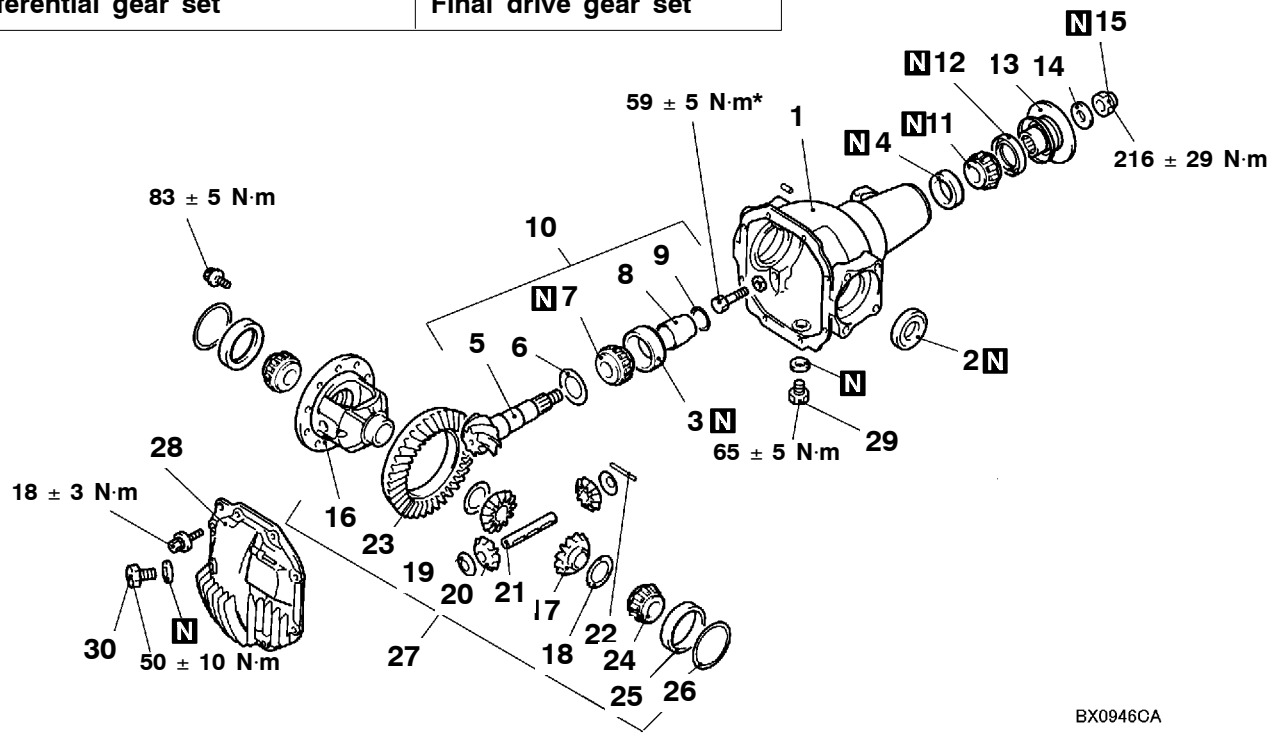

Reassembly steps

1. Differential carrier
▶A◀ 2. Oil seal
▶B◀ 3. Drive pinion front bearing outer race
▶C◀ 4. Drive pinion rear bearing outer race
▶D◀ ● Pinion height adjustment
5. Drive pinion
6. Drive pinion front shim (for pinion height adjustment)
7. Drive pinion front bearing inner race
8. Drive pinion spacer
▶E◀ ● Drive pinion turning torque adjustment
9. Drive pinion rear shim (for turning torque adjustment)
10. Drive pinion assembly
11. Drive pinion rear bearing inner race
12. Oil seal
13. Companion flange
14. Washer
15. Self-locking nut
16. Differential case
▶F◀ ● Differential gear backlash adjustment
17. Side gear spacer
18. Side gear
19. Pinion washer
20. Pinion gear
21. Pinion shaft
▶G◀ 22. Lock pin
▶H◀ 23. Drive gear
▶I◀ 24. Side bearing inner race
25. Side bearing outer race
▶J◀ ● Drive gear backlash adjustment
26. Side bearing spacer
27. Differential case assembly
28. Cover
29. Drain plug
30. Filler plug

NOTE
Specified torque with astarisks means that it is covered with oil.

Lubrication, Sealing and Adhesive Points

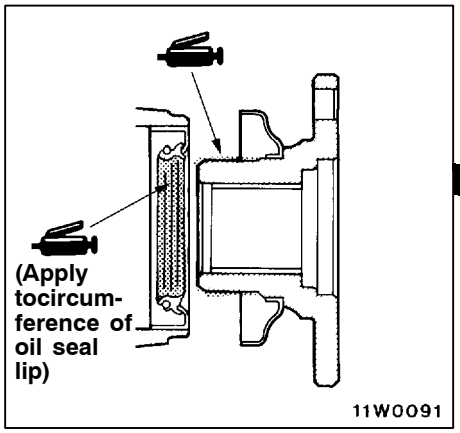

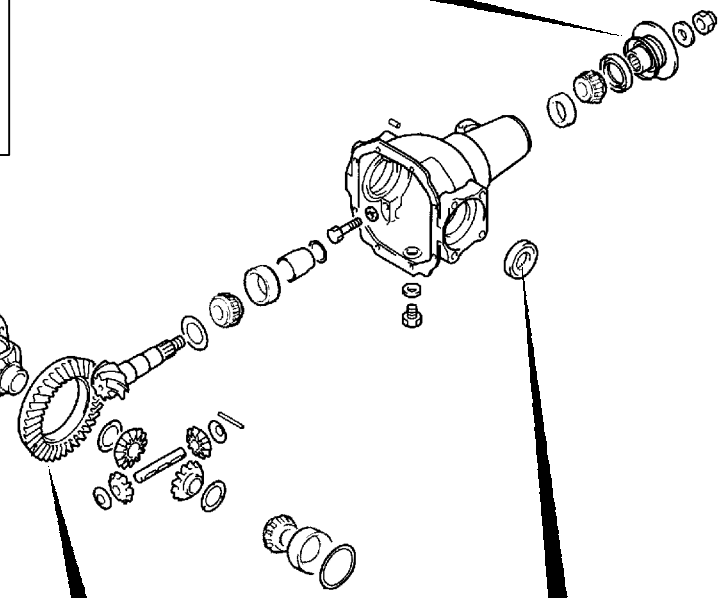

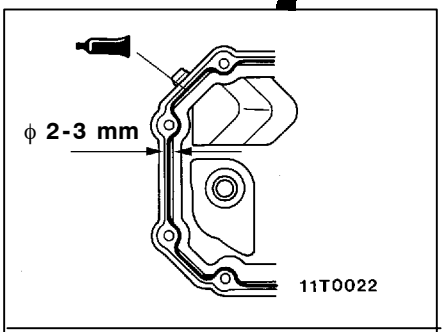

Sealant:
3M ATD Part No. 8663 orequivalent

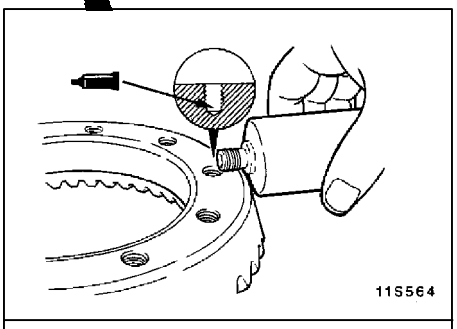

Adhesive:
3M Stud Locking 4170 or equivalent

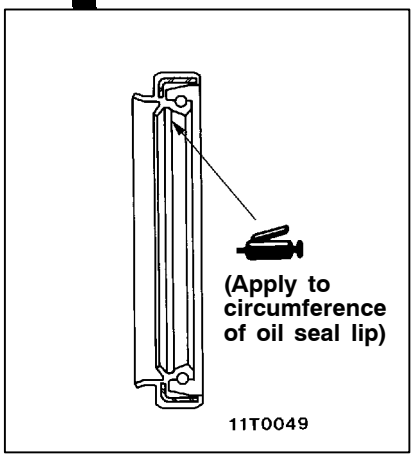

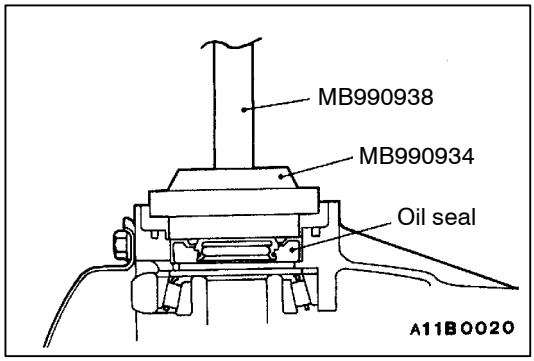

REASSEMBLY SERVICE POINTS

▶A◀ OIL SEAL INSTALLATION

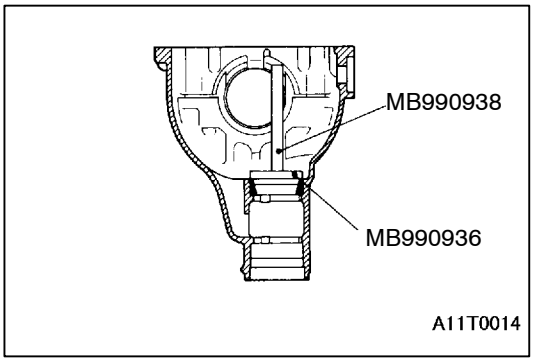

▶B◀ DRIVE PINION FRONT BEARING OUTER RACE INSTALLATION

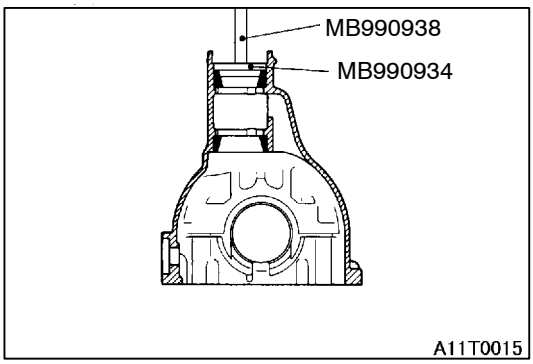

▶C◀ DRIVE PINION REAR BEARING OUTER RACE INSTALLATION

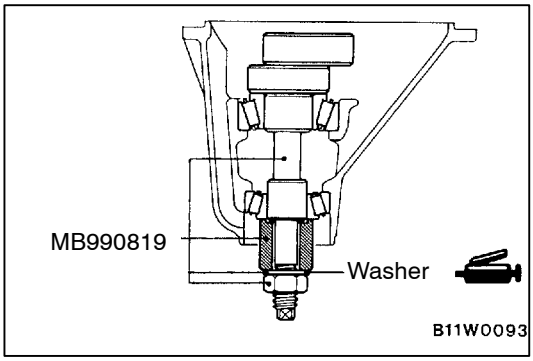

▶D◀ PINION HEIGHT ADJUSTMENT

Adjust the drive pinion height by the following procedure.

1. Apply multipurpose grease to the washer of the special tool.
2. Install the special tool, drive pinion front and rear bearing inner races to the gear carrier.

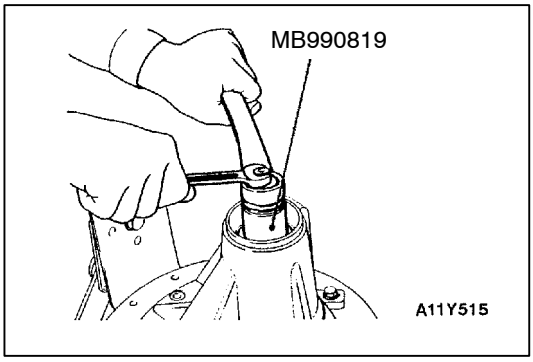

3. Tighten the nut of the special tool while measuring the turning torque of the drive pinion. Gradually keep tightening the nut of the special tool until the turning torque of the drive pinion (without oil seal) is at the standard value.

Standard value:
(Without oil seal)

Bearing division	Bearing lubrication	Turning torque
New	None (With anti-rust agent)	0.83 - 1.19 N·m

NOTE
The special tool cannot be turned a full revolution, so turn it several times within the range of movement to run in the bearing, and then measure the turning torque.

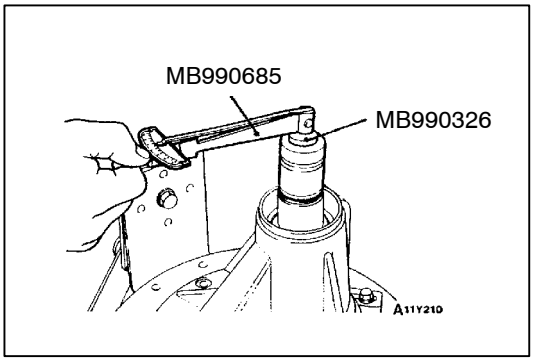

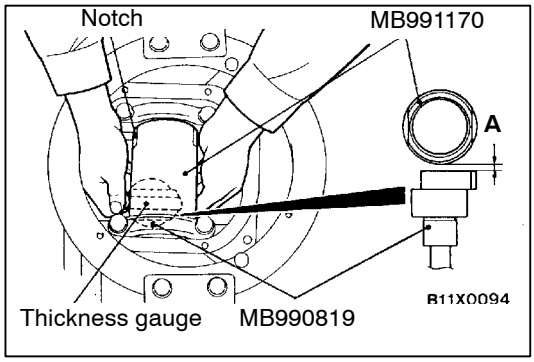

4. Clean the side bearing hub.
5. Install the special tools to the side bearing hub of the gear carrier, and then install the bearing cap.

   NOTE
   Always check that the notch is in the shown position and that the special tools are touching firmly against the side bearing hub.

6. Use a thickness gauge to measure the clearance (A) between the special tools.

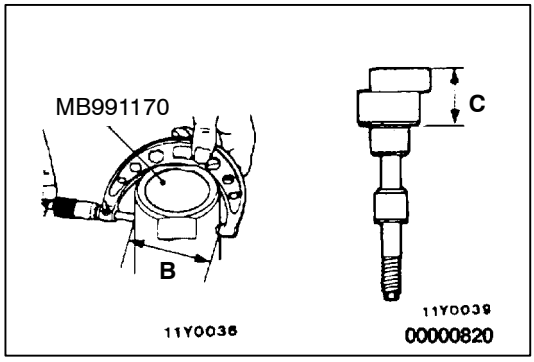

7. Remove the special tools (MB991170, MB990819).
8. Use a micrometer to measure the special tool in the places (B, C) shown in the illustration.

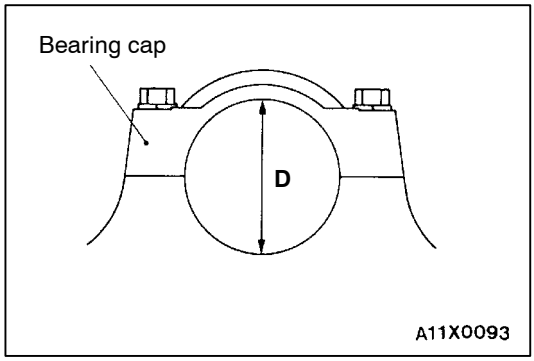

9. Install the bearing cap, and then use a cylinder gauge and micrometer to measure the inside diameter (D) of the bearing cap as shown in the illustration.
10. Calculate the thickness (E) of the required drive pinion front shim by the following formula, and then select a shim which most closely matches this thickness.
    E = A + B + C - 1/2D - 100.0

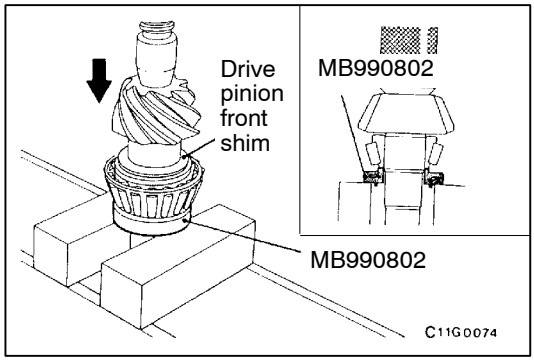

11. Fit the selected drive pinion front shim(s) to the drive pinion, and press-fit the drive pinion front bearing inner race by using the special tool.

▶E◀ DRIVE PINION TURNING TORQUE ADJUSTMENT

Adjust the drive pinion rotation torque by using the following procedure:

1. Insert the drive pinion into the gear carrier, and then install the drive pinion spacer, the drive pinion rear shim, the drive pinion rear bearing inner race, and the companion flange in that order.

   NOTE
   Do not install the oil seal.

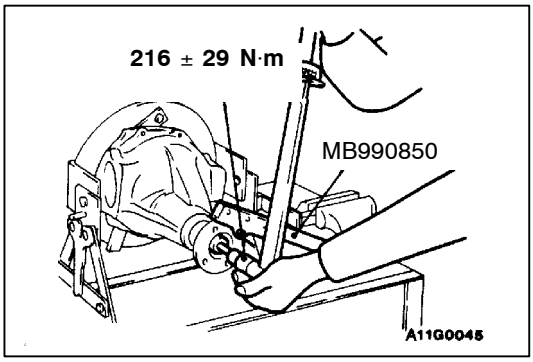

2. Tighten the companion flange to the specified torque by using the special tool.

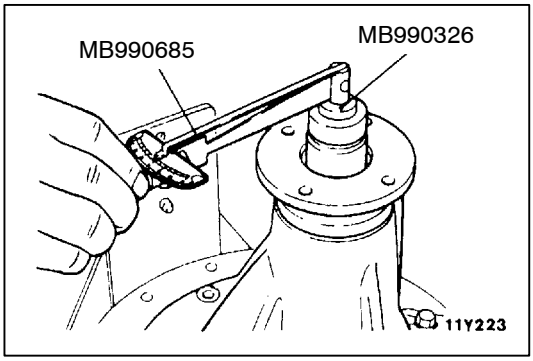

3. Measure the drive pinion turning torque (without the oil seal) by using the special tools.

Standard value:
(Without oil seal)

Bearing division	Bearing lubrication	Turning torque
New	None (With anti-rust agent)	0.83 - 1.19 N·m

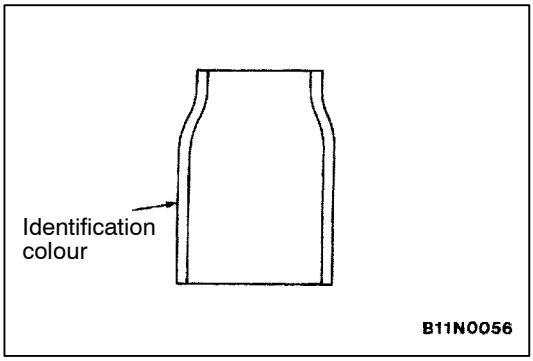

4. If the drive pinion turning torque is not within the range of the standard value, adjust the preload by replacing the drive pinion rear shim (s) or the drive pinion spacer.

NOTE
When selecting the drive pinion rear shims, if the number of shims is large, reduce the number of shims to a minimum by selecting the drive pinion spacers. Also, select the drive pinion spacer from the following two types.

Drive pinion spacer height (mm)	Identification colour
56.67	White
57.01	-

NOTE
Apply gear oil around the circumference of companion flange (and the mating surface of oil seal) when press fitting oil seal into companion flange.

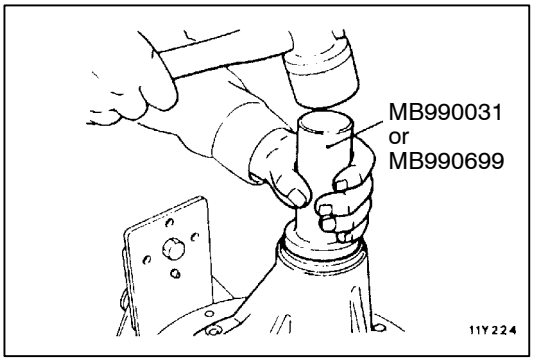

5. Remove the companion flange and drive pinion again. Then, after inserting the drive pinion rear bearing inner race into the gear carrier, use the special tool to press-fit the oil seal.

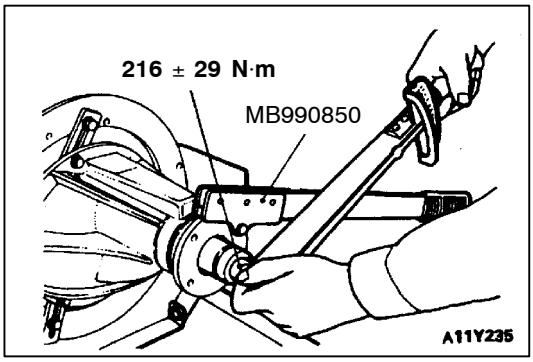

6. Install the drive pinion assembly and companion flange with mating marks properly aligned, and tighten the companion flange self-locking nut to the specified torque by using the special tools.

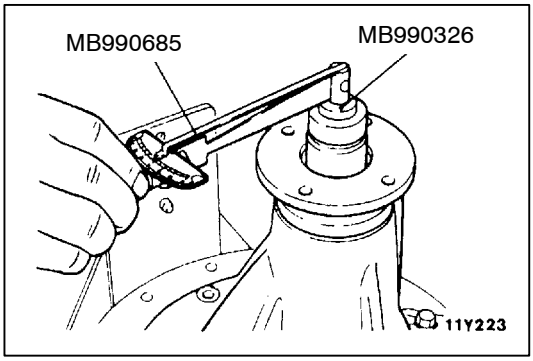

7. Measure the drive pinion turning torque (with the oil seal) by using the special tools.

   Standard value:
   (With oil seal)

Bearing division	Bearing lubrication	Turning torque
New	None (With anti-rust agent)	0.93 - 1.28 N·m
	Gear oil applied	0.97 - 1.32 N·m

8. If the drive pinion turning torque is not within the standard value, check the tightening torque of the companion flange self-locking nut and the oil seal.

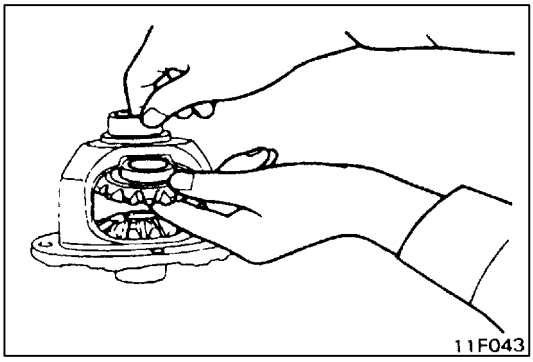

▶F◀ DIFFERENTIAL GEAR BACKLASH ADJUSTMENT

1. Assemble the side gears, side gear spacers, pinion gears and pinion washers into the differential case.
2. Temporarily install the pinion shaft.

   NOTE
   Do not drive in the lock pin yet.

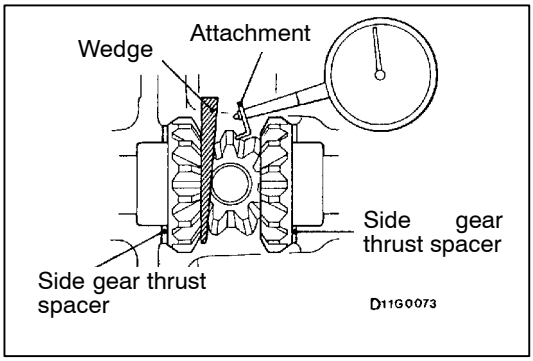

3. Insert a wedge between the side gear and the pinion shaft to lock the side gear.
4. Measure the differential gear backlash with a dial indicator on the pinion gear.

   Standard value: 0 - 0.076 mm

   Limit: 0.2 mm

5. If the differential gear backlash exceeds the limit, adjust the backlash by installing thicker side gear spacers.

6. If adjustment is not possible, replace the side gears and pinion gears as a set.
7. Measure the differential gear backlash once again, and confirm that it is within the limit.

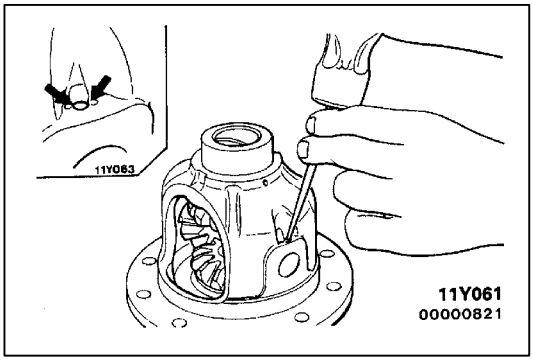

▶G◀ LOCK PIN INSTALLATION

1. Align the pinion shaft lock pin hole with the differential case lock pin hole, and drive in the lock pin.
2. Stake the lock pin with a punch at two points.

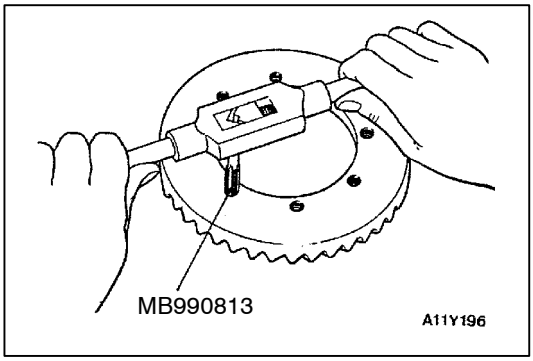

▶H◀ DRIVE GEAR INSTALLATION

1. Clean the drive gear attaching bolts.
2. Remove the adhesive adhered to the threaded holes of the drive gear by turning the special tool (tap M10 x 1.25), and then clean the threaded holes by applying compressed air.

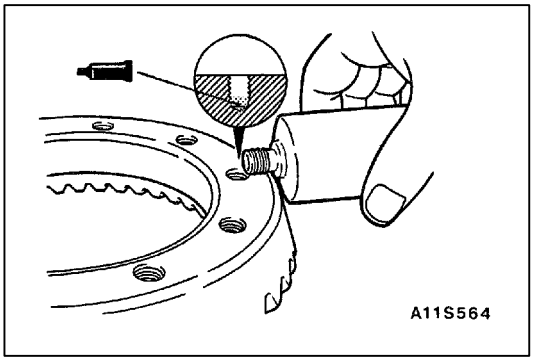

3. Apply the specified adhesive to the threaded holes of the drive gear.

   Specified adhesive:
   3M Stud Locking 4170 or equivalent
4. Install the drive gear onto the differential case with the mating marks properly aligned. Tighten the bolts to the specified torque in a diagonal sequence.

   Tightening torque: 83 ± 5 N·m

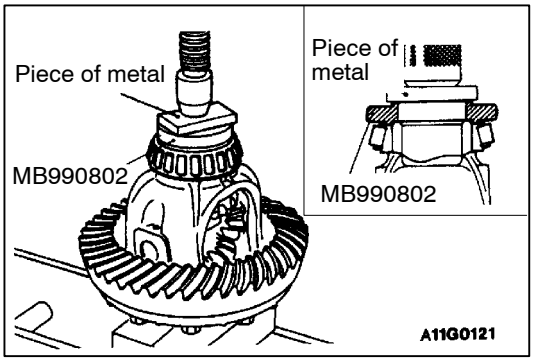

▶I◀ SIDE BEARING INNER RACE INSTALLATION

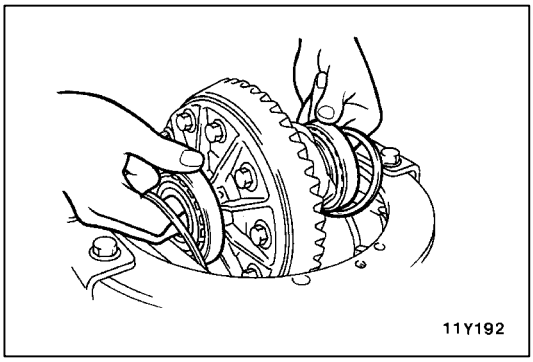

▶J◀ DRIVE GEAR BACKLASH ADJUSTMENT

Adjust the drive gear backlash by the following procedures:

1. Install the side bearing spacers, which are thinner than those removed, to the side bearing outer races, and then mount the differential case assembly into the gear carrier.

   NOTE
   Select side bearing spacers with the same thickness for both the drive pinion side and the drive gear side.

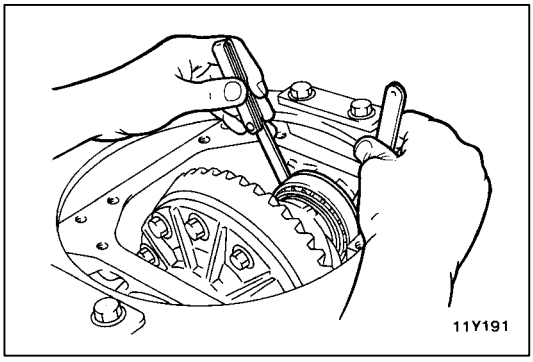

2. Push the differential case assembly to one side, and measure the clearance between the gear carrier and the side bearing adjusting spacer with a thickness gauge.

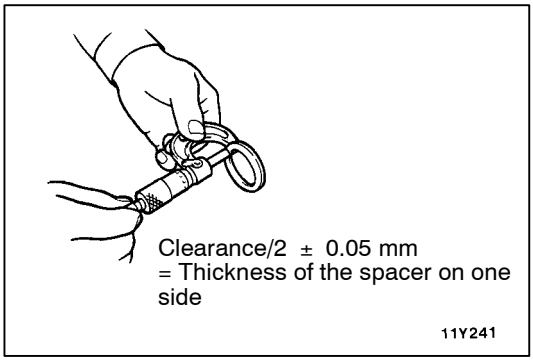

3. Measure the thickness of the side bearing adjusting spacers on one side, select two pairs of spacers which correspond to that thickness plus one half of the clearance plus 0.05 mm, and then install one pair each to the drive pinion side and the drive gear side.

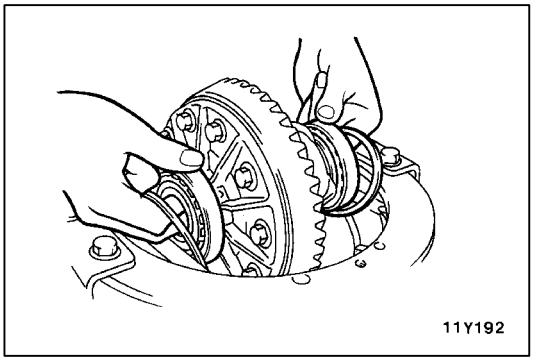

4. Install the side bearing adjusting spacers and differential case assembly, as shown in the illustration, to the gear carrier.

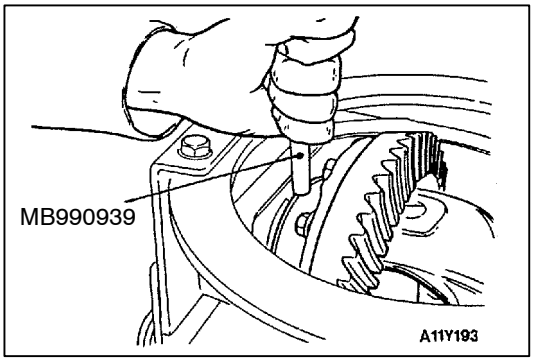

5. Tap the side bearing adjusting spacers with the special tool to fit them to the side bearing outer race.

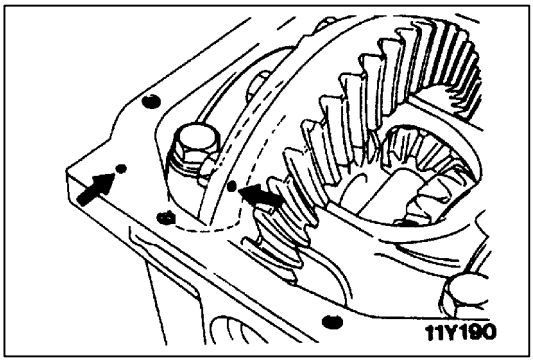

6. Align the mating marks on the gear carrier and the bearing cap, and then tighten the bearing cap.

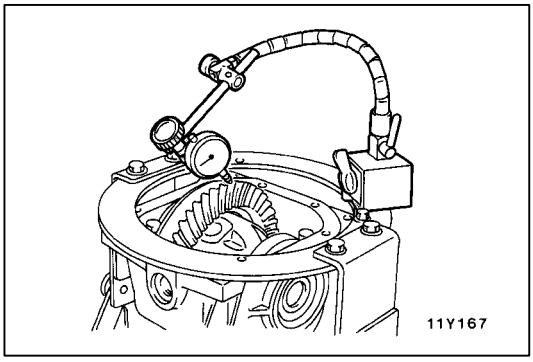

7. With the drive pinion locked in place, measure the drive gear backlash with a dial indicator on the drive gear.

   NOTE
   Measure at four points or more on the circumference of the drive gear.

   Standard value: 0.11 - 0.16 mm

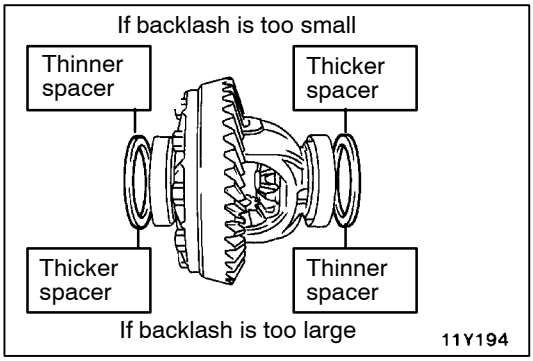

8. Change the side bearing adjusting spacers as illustrated, and then adjust the drive gear backlash between the drive gear and the drive pinion.

   NOTE
   When increasing the number of side bearing adjusting spacers, use the same number for each, and as few as possible.

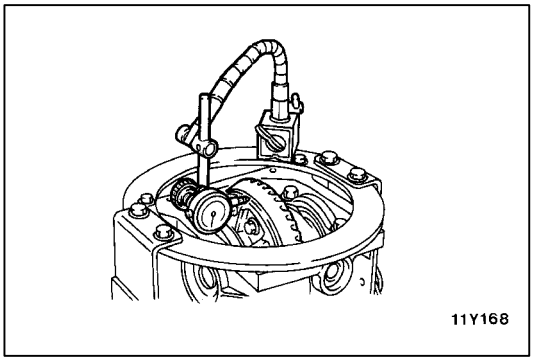

9. Check the drive gear and drive pinion for tooth contact. If poor contact is evident, make adjustment. (Refer to P. 26-39.)
10. Measure the drive gear runout at the shoulder on the reverse side of the drive gear.

    Limit: 0.05 mm

11. If the drive gear runout exceeds the limit, reinstall by changing the phase of the drive gear and differential case, and remeasure.
12. If adjustment is not possible, replace the differential case or replace the drive gear and drive pinion as a set.

SOLENOID VALVE, VACUUM PIPE, VACUUM TANK

REMOVAL AND INSTALLATION

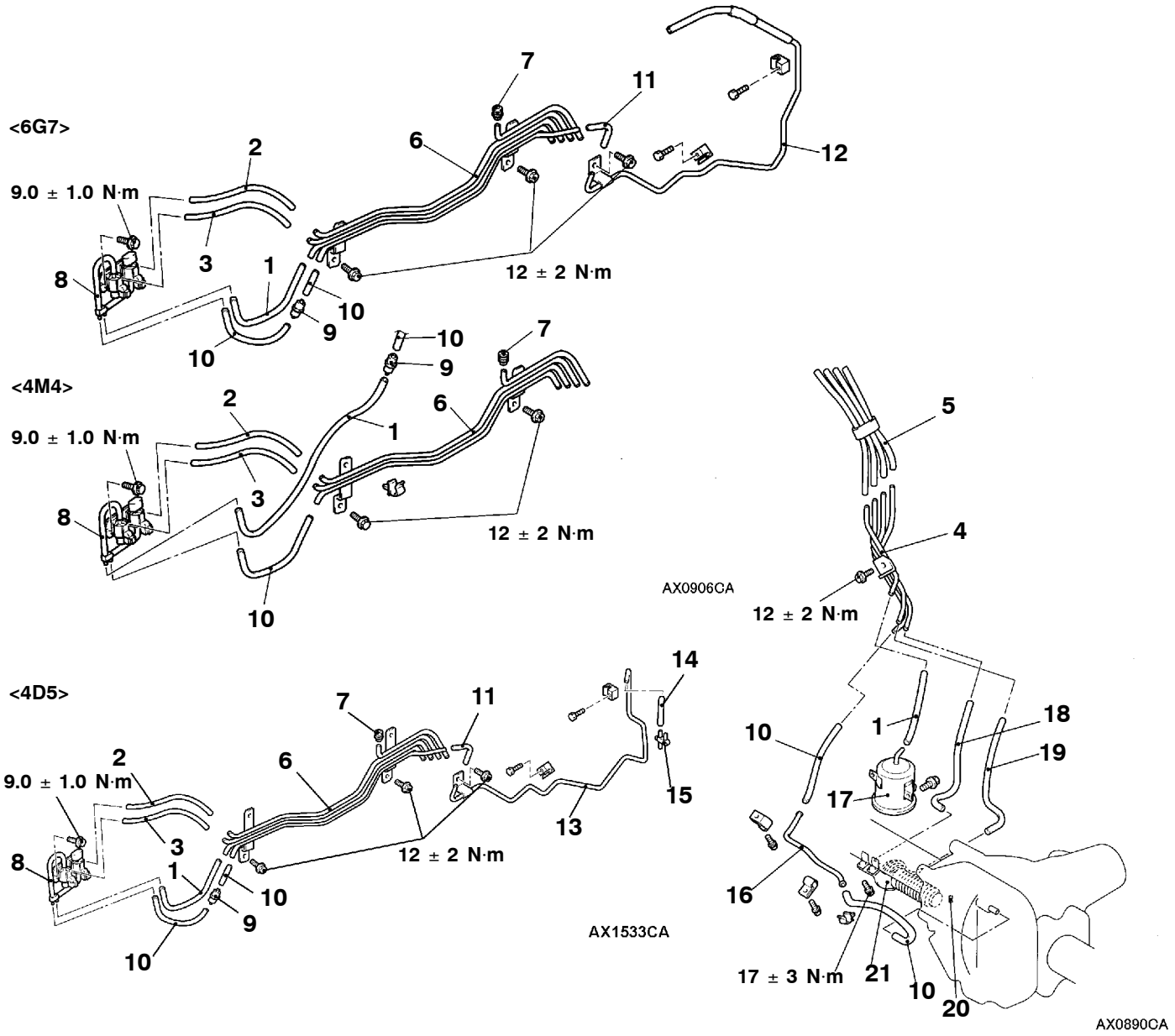

Solenoid valve assembly, Vacuum tank assembly removal steps

▶A◀ 1. Vacuum hose (white stripe)
▶A◀ 2. Vacuum hose (blue stripe)
▶A◀ 3. Vacuum hose (yellow stripe)
4. Vacuum pipe assembly
5. Vacuum hose assembly
6. Vacuum pipe assembly
7. Breather cap
8. Solenoid valve assembly
▶B◀ 9. Check valve
10. Vacuum hose
11. Vacuum hose
12. Vacuum pipe assembly (6G7)
13. Vacuum pipe assembly (4D5)
14. Vacuum hose
15. Vacuum terminal
16. Breather pipe
17. Vacuum tank assembly

Vacuum actuator assembly removal steps

▶A◀ 18. Vacuum hose (blue stripe) connection
▶A◀ 19. Vacuum hose (yellow stripe) connection
◀A▶ 20. Pin
21. Vacuum actuator assembly

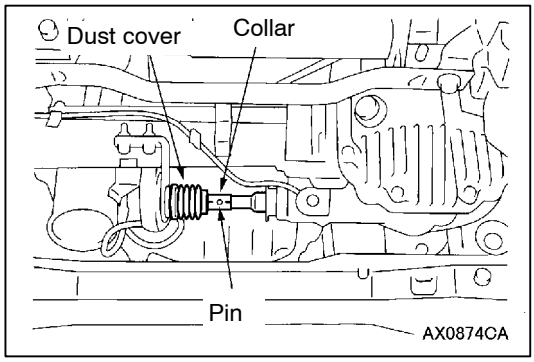

REMOVAL SERVICE POINT

◀A▶ PIN REMOVAL

1. Remove one side of dust cover mounting part on vacuum actuator assembly.
2. Match collar of pin hole with that of another pin hole to remove a pin with a punch.

INSTALLATION SERVICE POINTS

▶A◀ VACUUM HOSE INSTALLATION

Match collar of each pipe of vacuum hose and solenoid valve and vacum pipe and assemble them.

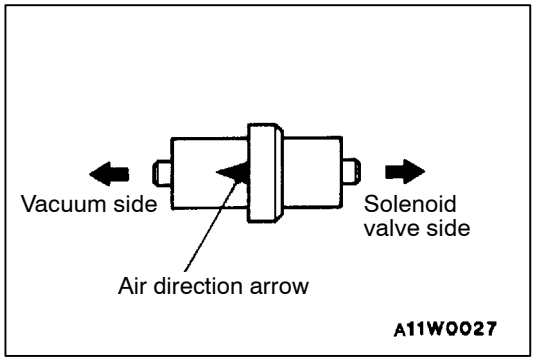

▶B◀ CHECK VALVE INSTALLATION

Install so that air direction arrow points to the vacuum side.

FRONT DIFFERENTIAL MOUNT

REMOVAL AND INSTALLATION

Caution

***: Indicates parts which should be temporarily tightened, and then fully tightened with the vehicle on the ground in the unladen condition.**

Pre-removal and Post-installation
- Under Cover and Skid Plate Removal and Installation
- Gear Oil Draining and Refill (Refer to P.26-11.)
- Drive Shaft Removal and Installation (Refer to P.26-16.)
- Inner Shaft Removal and Installation (Refer to P.26-24.)

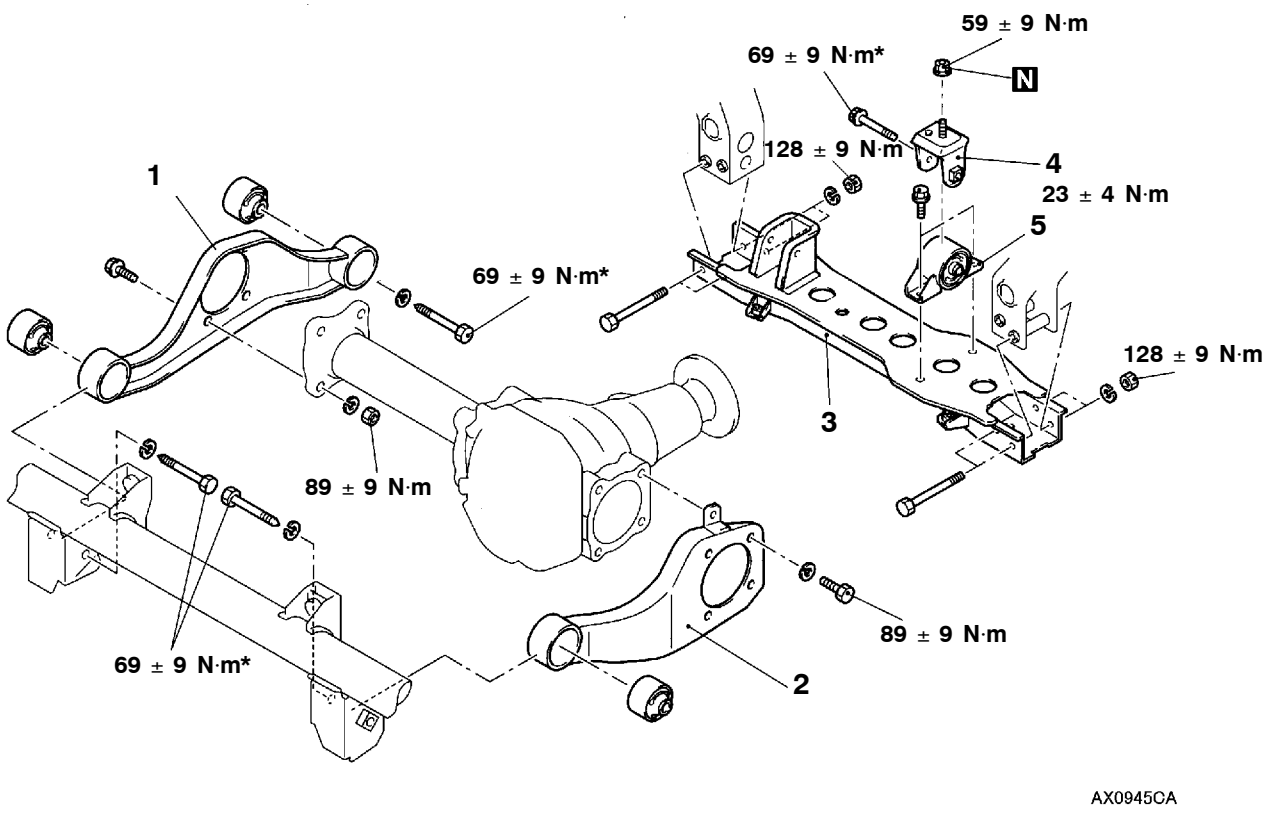

Differential mount bracket assembly(L.H./R.H.) removal steps

- Drive shaft assembly removal (refer to P.26-16)

▶A◀ 1. Differential mount bracket assembly (R.H.)

▶A◀ 2. Differential mount bracket assembly (L.H.)

Differential mount bracket assembly (rear) removal steps

3. No.2 crossmember
4. Differential support bracket
- Differential carrier & housing assembly

▶A◀ 5. Differential mount bracket assembly (rear)

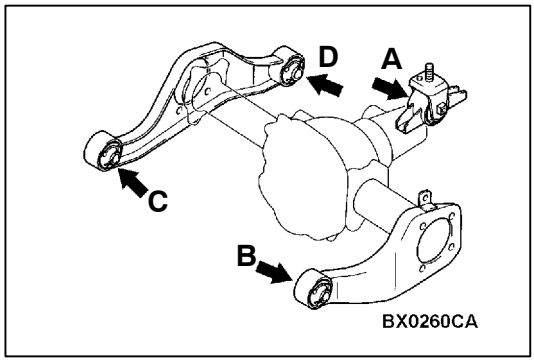

INSTALLATION SERVICE POINT

▶A◀ DIFFERENTIAL MOUNT BRACKET ASSEMBLY INSTALLATION

Tighten the bolts shown in the diagram with the specified torque in the order of A, B, C, D or A, C, B, D.

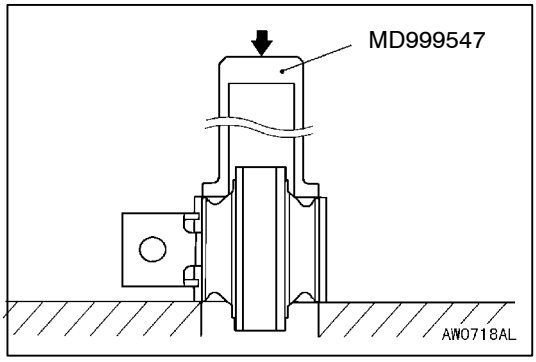

DIFFERENTIAL MOUNTING INSULATOR REPLACEMENT

DIFFERENTIAL MOUNTING BRACKET <L.H., R.H.-FRONT, REAR>

1. Remove insulator with special tools.

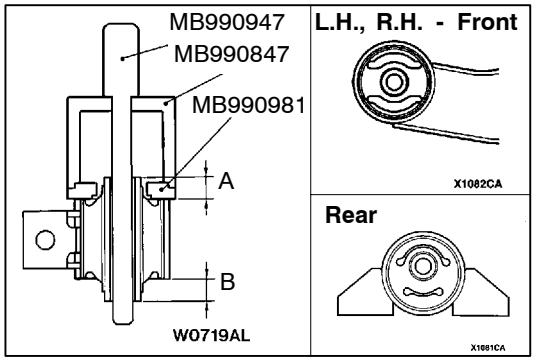

2. By using special tools along with a hydraulic press, press fit each insulator to adjust until the hollow part faces as shown and the difference between dimensions A, B should be within 0.7 mm.

DIFFERENTIAL MOUNT BRACKET <R.H.-REAR>

1. Remove the insulator with the special tool.

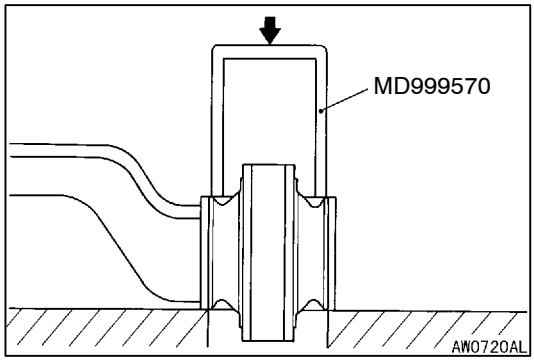
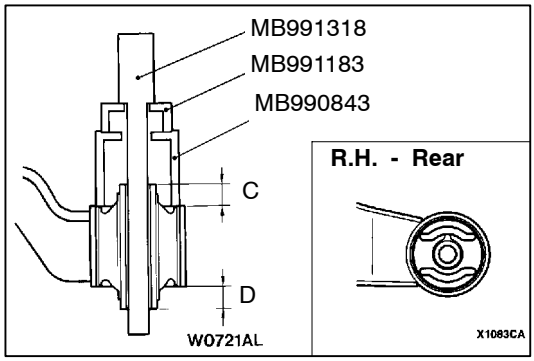
2. By using special tools along with a hydraulic press, press fit each insulator to adjust until the hollow part faces as shown and the difference between dimensions C, D should be within 0.7 mm.